North Dakota Renewable Energy Council
Final Report

Solar Soaring Power Manager

Packet Digital, LLC

201 5th St. N, #1500
Fargo ND, 58102

701-232-0661

May 2018

Introduction

This document is the final report for the Solar Soaring Power Manager project. The activities presented here took place at Packet Digital's facilities in Fargo, ND, as well as at the U.S. Naval Research Laboratory (NRL) facilities.

Packet Digital, in collaboration with NRL, achieved extended endurance and demonstrated an 11 hour flight and landed with a third of the battery capacity remaining. Packet Digital and NRL have developed and delivered the "day shift drone". In addition, Packet Digital is bringing two of the innovative power electronic products developed under this project to the commercial market.

1) The fast tracking 98.1% efficient maximum power point tracker is available for production and selling in small quantity. Packet is participating with the MPPT in the UAV military program of record (Puma) solar conversion.
2) In addition, Packet Digital is partnering with a battery distributor for the commercial launch of the Smart Battery. The Smart Battery enables commercial drone operators to manage their fleet of drone batteries with precise onboard measurement and logging. Packet Digital showcased the commercial offering of the Smart Battery and Charger at the AUVSI 2018 in Denver last month with excellent results. Order for 20 units has been received.

A full project review is presented below.

Review of the Objective and Primary Results:

This research and development project has created and demonstrated a solar soaring power management system for Unmanned Aircraft Systems (UAS) to initially double fly times and ultimately provide unlimited endurance powered by solar energy. This has been achieved by harnessing solar energy with high-efficiency, flexible photovoltaics and auto-soaring technology to enable the UAS to autonomously gain lift from rising hot air along with advanced power management algorithms. Packet Digital has created an advanced solar power management and distribution system (PMAD) combining flexible, high-efficiency power conversion circuitry to dramatically extend flight times in unmanned aircraft.

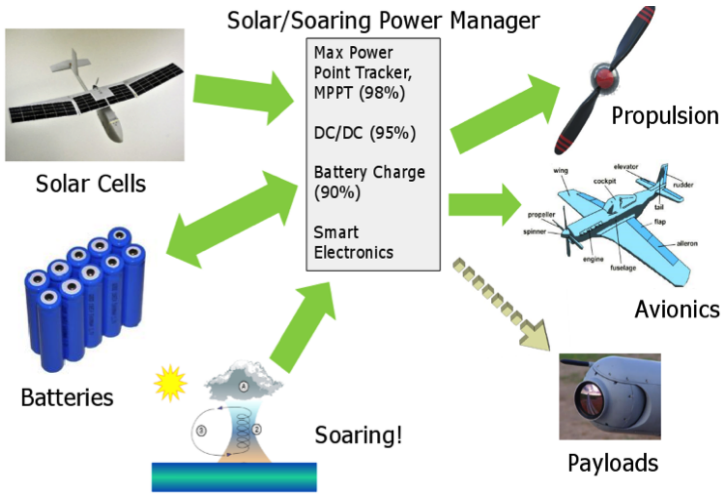

Figure 1: System Overview

This product optimizes the power conversion from the solar array to the batteries, from the batteries to the electronics, and from the batteries to the propulsion motor. The power conversion circuitry will provide state-of-the-art, high-efficiency power while the microprocessor will run advanced algorithms for Maximum Power Point Tracking (MPPT) and auto-soaring.

In addition, Packet Digital has designed prototypes, tested and created a commercial product of a Smart Battery and Charger. The Smart Battery management system provides a simple, clear user interface to display capacity as well as real-time and historical data indicating state of charge and overall battery health. This information is critical for commercial users with fleets of drones and hundreds or thousands of batteries who currently have no way of tracking battery health and must resort to discarding and replacing batteries periodically to avoid failures in the field. As part of the ND REC project, Packet Digital, working with Chiptronics in Dunseith, ND, has created and tested a prototype system. With these positive results, Packet Digital has partnered with Venom to make a commercial offering of the system which was featured at the AUVSI conference in May.

Schedule

This project was divided into three phases, of which phases I and II were 9-month duration and phase III was 12 months. This final report covers the entirety of the project.

Deliverables

- Produce a solar cell covering the desired spectrum with 30-35% efficiency, with a target of 40%
- Perform multiple flight tests utilizing a solar-enabled, extended-endurance UAS
- Achieve power management system with greater than 90% efficiency for typical loads, with a target of 95%, to extend battery life sufficiently to survive night-time flight
- Innovate Maximum Power Point Tracker (MPPT) algorithm for extracting maximum charging capacity from the solar cells
- Develop a manufacturing plan for a commercial, extended-endurance, solar UAS

Final Status

Objective 1: Solar Cell Development

Within this project, the NRL team developed and fielded several solar cell and array technologies for the UAV wings. The first wings included the high-efficiency, multijunction (MJ) solar cells to cover the wings. These MJ solar cells are capable of achieving upwards of 33% efficiency. NRL has built test panels and performed outdoor ground testing (Figure 2). These measurements indicated that a full PV airplane of MJ cells would deliver ~118 W. The team has completed flight testing of these solar wings, demonstrating +14 hrs of flight endurance capability.

The most recent arrays included Si solar cells. These provided solar wings at 22% efficiency at a dramatically reduced cost (about a factor of ~50). The NRL team members integrated into the wings of the airframe and flight testing has been completed (Figure 3). With one particular flight, took off at 83% battery and landed 4hr 15 min later at 95% state of charge. The takeaway from these results is that with the currently available battery technologies, the lower efficiency Si arrays performed on par with the higher efficiency MJ arrays.

Figure 2: Members of the NRL team performing outdoor ground testing of the MJ arrays.

Figure 3: One of our solar UAV prototypes at Port Canaveral, FL on a Solar-Soaring Flight testing. Using Si solar cells on the wings

Objective 2: Test Flights

Several test flights were performed during the course of this program by the Naval Research Laboratory at a military field in the Washington DC area.

The NRL team focused on the flight testing of the solar extended endurance aircraft, shown in figure 4, which was fitted with Si solar cells to create the solar wings. The cells were diced into thirds, and a total of 52 cells were incorporated into the wings. The PV arrays were laminated and co-molded the wing and PV arrays. The power electronics system provided by Packet Digital consisting of the MPPT, PMAD and smart battery were integrated into the aircraft. The takeoff mass was 6.8kg, of which 1.8kg was the battery.

Figure 4: PV-SBXC aircraft with Si solar cells attached to the wings

The first test flight was designed to provide initial flight data and uncover any integration issues. The flight time from takeoff to landing was a total of 81 minutes. The system consumed 119.2 Whr, at an average of 88.0 W. The solar array supplied 63.6 Whr of power and the battery supplied 55.9 Whr. The MPPT efficiency was 97.2%, and the battery state of charge (SOC) started at 99% and ended at 86%. The final results were that the array provided 53% of the energy while the battery provided 47% of the energy. It should be noted that only 3 of 4 sub-arrays were functional due to a manufacturing issue.

The measured output from the PMAD system is shown in Figure 5. The data shows how, after the initial take off, the system settles in for a relatively smooth flight where the system consistently provides steady 5 and 12 V power feeds to the UAS subsystems. The data displayed in Figure 6 shows the performance of the solar wings where the solar arrays tracked the solar insolation well and efficiency was measured around 20%.

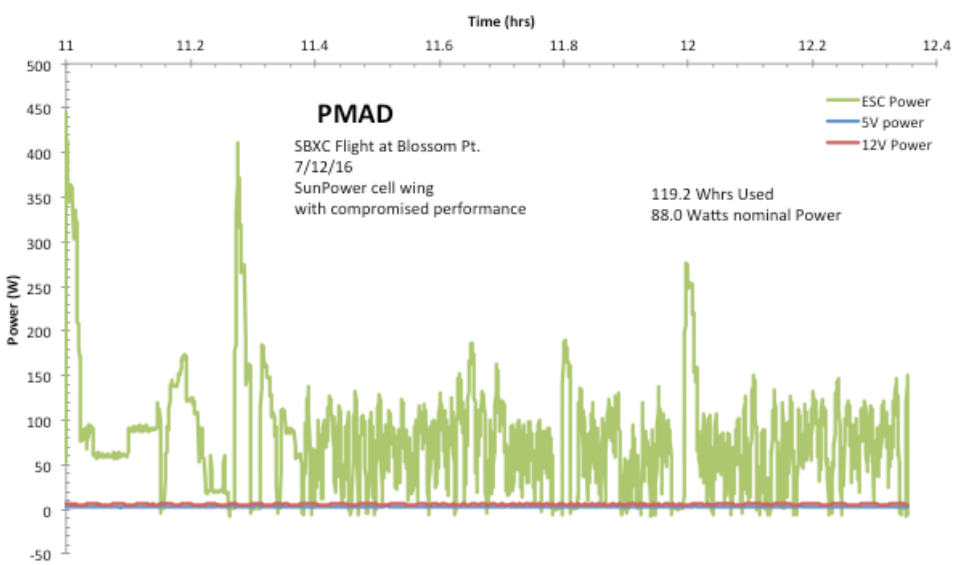

Figure 5: Measured output from the onboard PMAD system

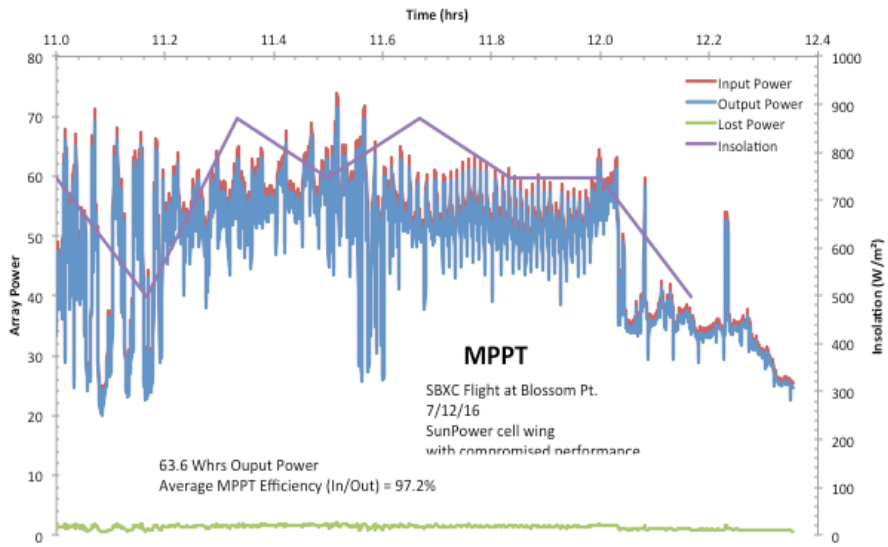

Figure 6: Measured data from the PV array on the wings during flight

The second test **flight featured the same aircraft but with all 4 solar sub-arrays functioning. The aircraft flew almost 11 hours, from sunrise to just before sunset,** with solar contributing more than 6 hours of the flight endurance -- a successful outing considering the highest insolation recorded that post-equinox day (October 14) was ~800W/m2, as compared to ~1100W/m2 that would occur in mid-June. The aircraft landed with a least a 3 hour charge on the battery remaining demonstrating a 14 hour plus endurance capability.

Follow on successful test flights were perfomed in excess of 10 plus hours landing with several hours of battery charge remaining. Battery successfully charging in flight from the solar.

Objective 3: UAS Power Management

The Naval Research Laboratory and Packet Digital have published a research paper for the IEEE Photovoltaic Specialists Conference describing the technology used in the NRL research aircraft that was used extensively during the course of this grant. The paper is entitled "Enhanced Endurance of a Unmanned Aerial Vehicles Using High Efficiency Si and III-V Solar Cells" and is available to members on the IEEE Photovoltaic Specialists Conference website, http://www.ieee-pvsc.org.

Packet Digital has created three versions of the Power Management and Delivery (PMaD) system during the course of this program. The original design featured many extra inputs for maximum flexibility during test flights. The second generation, shown in Figure 7, was miniaturized to include only those ports needed for the SB-XC test aircraft, which is representative of a typical fixed wing UAS. We were able to meet the high efficiency goals set forth in our deliverables, as shown in the measurements in Figures 8 and 9. These designs have been flown several times and demonstrated high reliability.

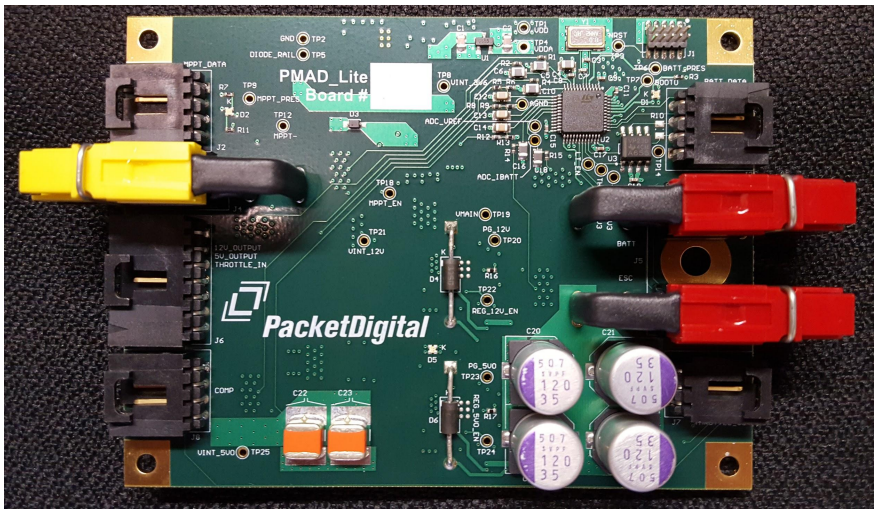

Figure 7: “PMaD Lite” Miniaturized Power Management System

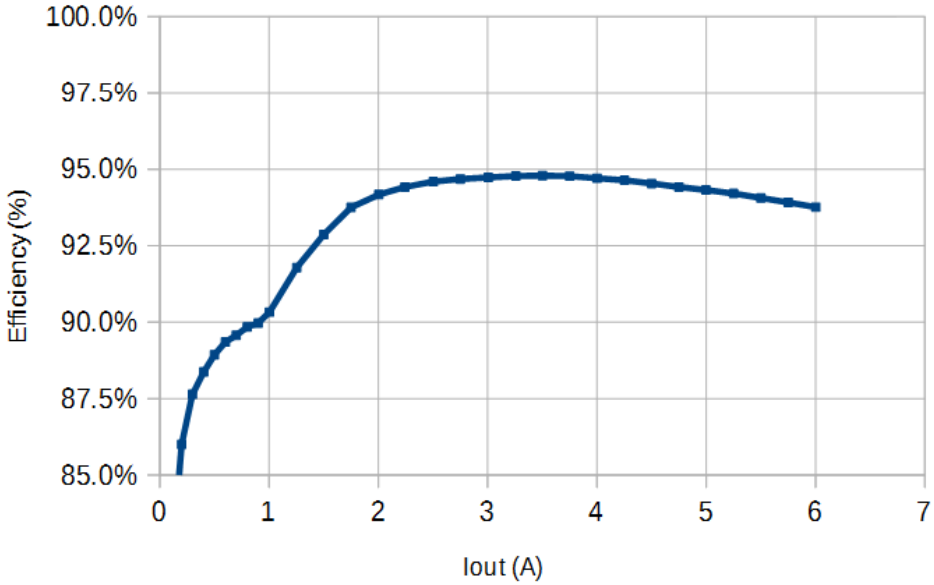

Figure 8: 5V Conversion Efficiency

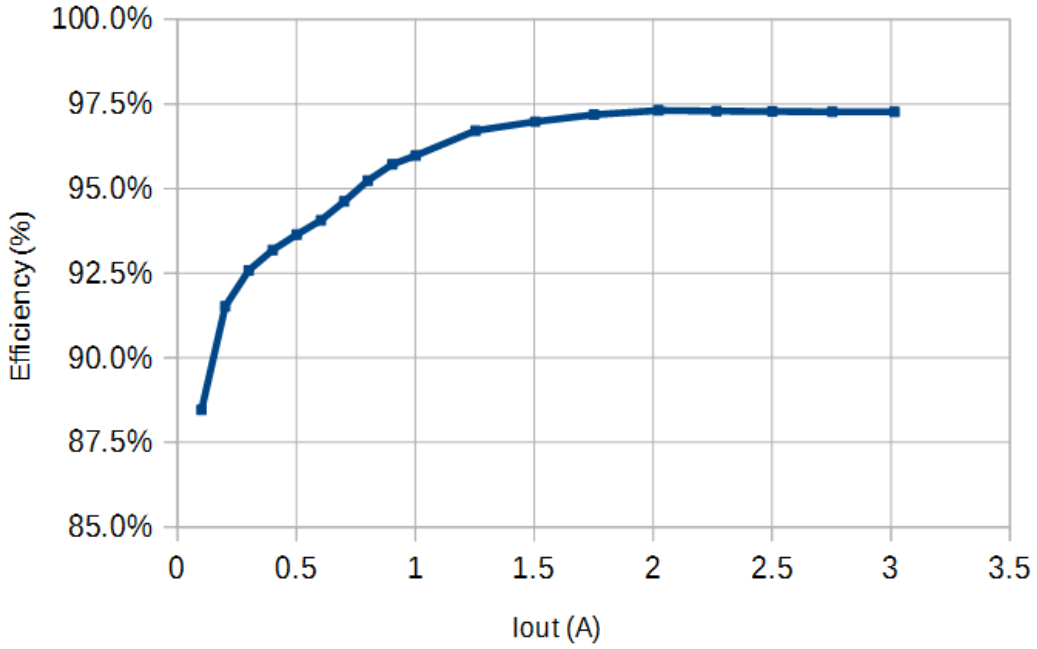

Figure 9: 12V Conversion Efficiency

Electronic Speed Control

An optimized electronic speed controller (ESC) was developed with a goal of extending flight time on multirotor UAS, which see the maximum benefit from this type of optimization since they use 4-8 electronic speed controls and typically use high torque, low RPM motors. The design utilizes an over-modulation scheme which allows more thrust for high throttle ranges which is not supported by commercially available hobby-grade controllers.

The prototype of the ESC is shown in figure 10. The board is 50mm x 32mm and weighs 44g. It supports up to a 6S configuration and will support up to 48A of motor current.

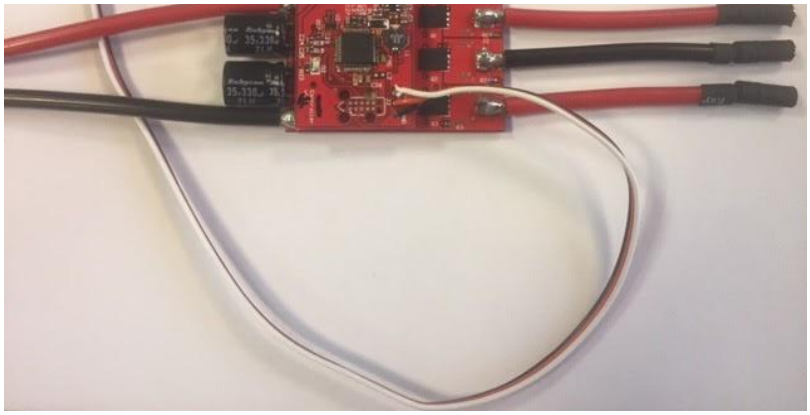
Figure 10: Electronic Speed Control

A firmware update utility, shown in figure 11, was created to allow the end user compatibility across different motor types as well as allowing updates to newer firmware with improved tuning

parameters as they are released. The update utility only requires the use of an inexpensive USB-to-UART converter board to handle the firmware update.

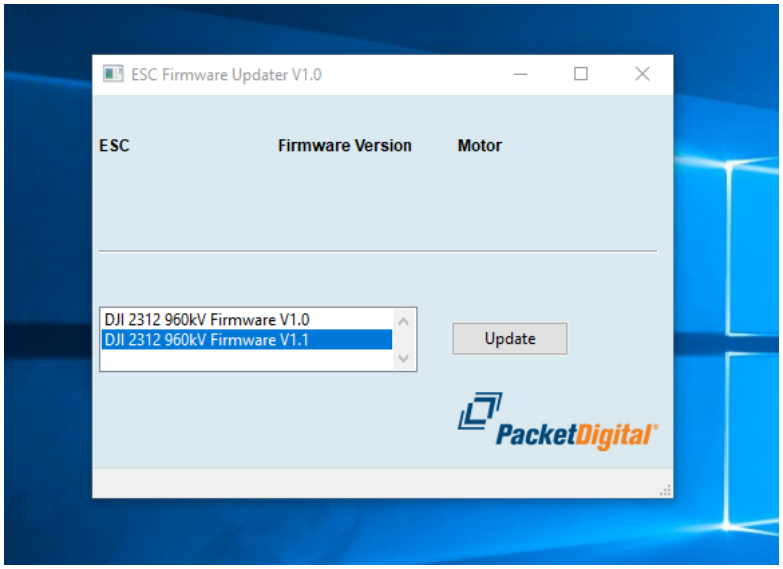

Figure 11: Firmware Update Utility

Smart Battery

Packet Digital has partnered with a quality Lithium Ion battery manufacturer, headquartered in the US, to bring a version of our smart battery to market for high-end and commercial drones. Packet Digital has also partnered with a US distributor of drone batteries and chargers to develop a battery charger intended for commercial applications. The charger is targeted at professional level users who manage fleets of drones and require an industrial scale charger to manage their batteries and meet their charging requirements at a large scale. The charger is a server cabinet mountable unit that provides simultaneous charge of up to four 22,000 mAh lithium polymer batteries, including Packet Digital's Smart Batteries. The charger is designed as a modular system to meet the unique needs of each customer. We are working with RedE in West Fargo, ND to aid in the mechanical design of the charger, which will be manufactured primarily in North Dakota.

Prototype units have been designed and delivered to our partner. Initial reviews of the prototypes were favorable and the design is in the process of being migrated to a production level design. An order of 20 systems has been received. Strong market interest was expressed during demonstrations at AUVSI, as shown in Figure 12.

Figure 12: Smart Battery and Related Commercial Charger on Display at AUVSI

Objective 4: Maximum Power Point Tracker

The maximum power point tracker has been updated and fabricated. Key features include:

- Support for higher voltage inputs
- More efficient and accurate current sensing
- Buck/boost capability

These improvements enable the MPPT to work with a wider variety of solar array and battery configurations, allowing it to be used in a wide variety of UASs. Prototypes of the new design have been constructed and tested. Figures 13 and 14 show measured efficiencies for buck and boost mode, respectively. In addition to high conversion efficiency in both modes, the new design retains the compact size and ultra-fast-tracking speed of the original design.

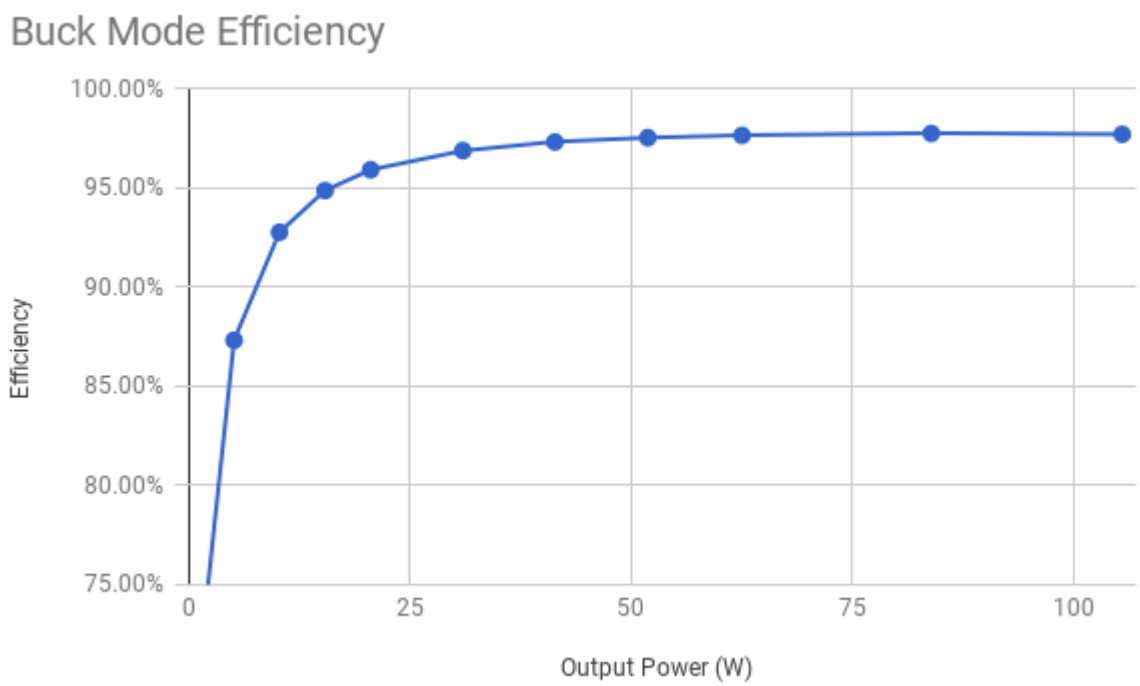

Figure 13: MPPT Conversion Efficiency in Buck Mode.

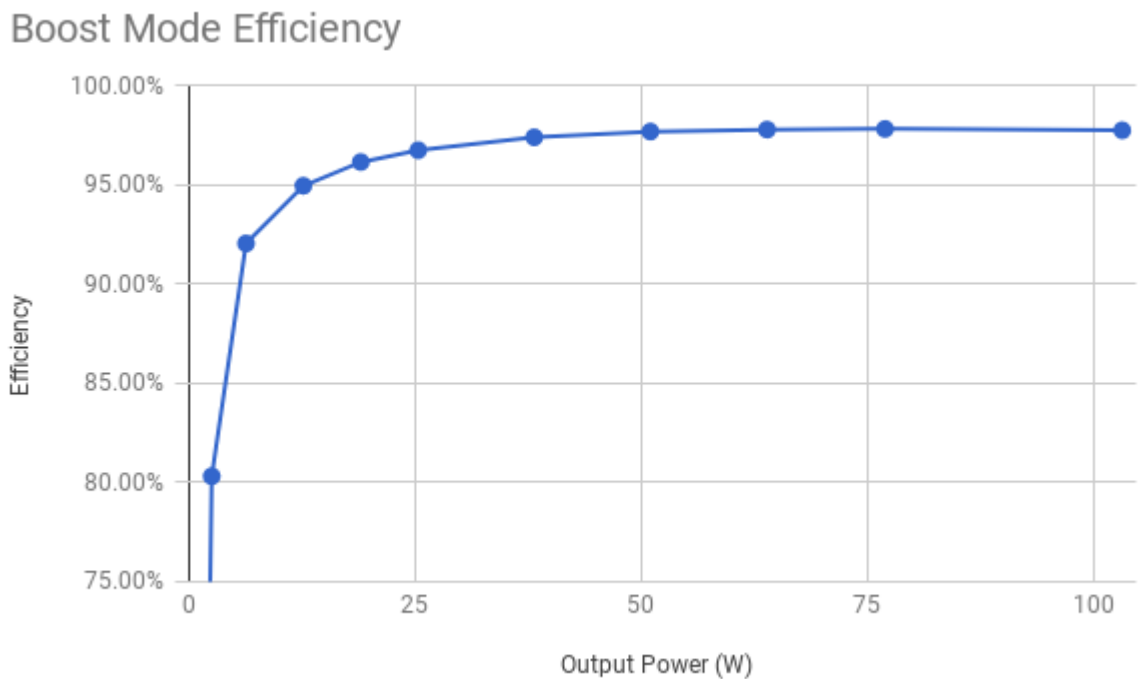

Figure 14: MPPT Conversion Efficiency in Boost Mode.

Objective 5: Manufacturing Plan

A manufacturing plan is in place utilizing Chiptronics in Dunseith, ND for electronics manufacturing, including the MPPT and Smart Battery electronics, as well as battery and smart charger assembly. The first batch order of batteries and chargers are being assembled by Packet Digital and manufacturing will be transitioned to Chiptronics for future builds.

For custom solar wings, a comparative structural analysis of the composite wing design is being performed with several types of core material, as well as the balsa-and-foam stock wing, to validate the design prior to flight testing. Test wings are currently being constructed at c2renew's facility in Fargo using a lower cost foam core for initial test purposes. These wings have been assembled with hinges, servos and wiring and have been fit to the fuselage. Static deflection analysis has been performed and a test flight is planned for the spring.

Budget

Total project cost for phase III is expected to be $1,000,000, of which $375,000 is provided by NDIC, and $625,000 is provided by the Naval Research Lab as matching funds.Table 2 lists the budget estimate for Phase III and Table 3 lists the budget status as of December 31, 2017. An extension in the amount of $125,000 in funds from NDIC was approved and added to the project budget.

Project Associated Expense	NDIC's Share	Naval Research Lab Share	Total
Total Personnel Costs	$390,000	$630,000	$1,020,000
Software Costs/Materials	$110,000	$120,000	$230,000
Total	$500,000	$625,000	$1,125,000

Table 2: Phase III Budget Estimate

Projected Associated Expense	NDIC Share	NRL Share	Packet Digital Share	Total
Total Personnel Costs	$390,069.75	$909,008.37	$447,962.52	$1,747,040.64
Software Costs/Materials	$109,930.25	$60,911.85	$0.00	$170,842.10
Total	$500,000.00	$969,920.22	$447,962.52	$1,917,882.74

Table 3: Budget Status

Summary

Project Deliverables:

- Solar cells and arrays
    - The Naval Research Lab fabricated wings with several sets of solar cells that were commercially produced using technology they have developed. Performance has been evaluated both on the ground and in the air.

- Test flights
    - The Naval Research Lab has performed several all-day test flights with the solar wings and Packet Digital electronics and battery demonstrating 14 plus hours of endurance.

- Power Management System
    - The Smart Battery and Power Management and Distribution system have been successfully tested in both a lab setting and in test flights with the Naval Research Laboratory. A commercial version of the Smart Battery has been developed and displayed at AUVSI and Interdrone. Packet Digital is currently working with a distributor to bring this to market along with a related charging system and management software. The first order of 20 systems has been received and manufacturing is underway.

    - The electronic speed control has been revised to target multi-rotor applications and a prototype has been produced and tested.

- Maximum Power Point Tracker
    - The high performance MPPT has been successfully tested in a lab setting and in all-day test flights. It has been adapted to reduce cost and operate over a wider

input and output voltage range, making it compatible with a wider range of aircraft.

    - The maximum power point tracking technology developed under this program has been adapted for commercial use as well. Packet Digital is working with industry partners to include the MPPT in a Program of Record aircraft for the military.

- Manufacturing Plan
    - c2renew has completed a set of non-solar carbon fiber wings. The same molds and techniques will be used to integrate the solar arrays directly into the upper surface of the wings.

    - Packet Digital is working with Johns Hopkins Applied Physics Lab and SolAero to supply the MPPT convert as part of a solar retrofit kit for the Puma UAS.

    - A manufacturing plan is in place utilizing Chiptronics in Dunseith, ND for electronics manufacturing, including the MPPT and Smart Battery electronics, as well as battery and smart charger assembly. The first batch order of batteries and chargers are being assembled by Packet Digital and manufacturing will be transitioned to Chiptronics for future builds.

Appendix - Confidential Information

Objectives 1 & 2 - Naval Research Lab

NRL fabricated and tested UAV wings with several different vendors, including MicroLink and SolAero. For reference, the MicroLink wing produced 97.8 Watts vs. 105.4 Watts for the SolAero array. Test flights were made in the Washington DC area under good solar conditions on May 18th. Both these sets of wings provided operational and battery charging for the UAV using the Packet Digital power management system. Endurance flights are planned for later this year.

Objective 3 - Smart Battery

In this application, our smart battery management system provides a simple, clear user interface to display capacity as well as real-time and historical data indicating state of charge and overall battery health. This information is critical for commercial users with fleets of drones and hundreds or thousands of batteries who currently have no way of tracking battery health and must resort to discarding and replacing batteries periodically to avoid failures in the field. We have created and performed initial tests of a prototype battery, shown in figure 16. Samples have been delivered to two key distributors during this interim and were featured at the AUVSI conference in May. We are working with Chiptronics in Dunseith, ND, for the electronics assembly and initial production units are expected to ship to distributors starting this summer.

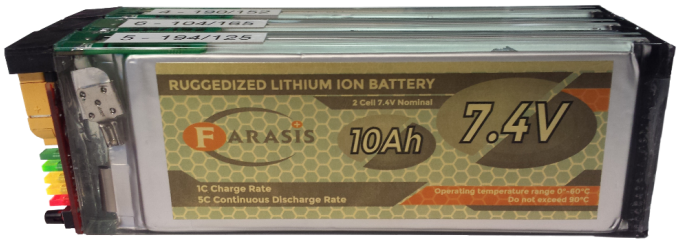

Figure 16: Commercial smart battery prototype

Based on initial feedback from the evaluation modules and interest shown at AUVSI and InterDrone, onboard datalogging and USB connectivity are being added to the smart battery design at this time. A slight change to the form factor of the circuit board was also made to accommodate slightly wider battery modules and a more robust data connector between the modules and the battery management circuit board.

Objective 5: Manufacturing Plan

c2renew has been working on analyzing the internal wing structure that was originally planned to ensure comparable stiffness and the reduction of weight for the composite wing structure. Using the mass properties tool in SolidWorks the original design for rigid polyurethane foam was evaluated with various cutout designs to reduce weight. By switching to Rohacell foam, chosen for its light weight structural properties, the weight of the total wing was reduced to better than the current wings in use by Packet Digital. The calculated weights are as follows:

Foam Design	Total Wing weight (Foam + Skins)
Current in Service Wing	Right: 1416 g, Left: 1442 g
Full Polyurethane Foam Core	1923 g
Polyurethane with 2 Strategic Cut Outs	1672 g
Polyurethane with 3 Strategic Cut Outs	1616 g
Full Rohacell Foam Core	1017 g

Two wing builds were simulated assuming a total plane weight of 15 lbs and a maximum of 5 gs of acceleration during flight. This calculates to an applied load of 300 N on the entire plane. Two wing types were simulated - the balsa wing and the optimum carbon fiber wing with Rohacell foam. The results are shown below.

Balsa and foam wing:

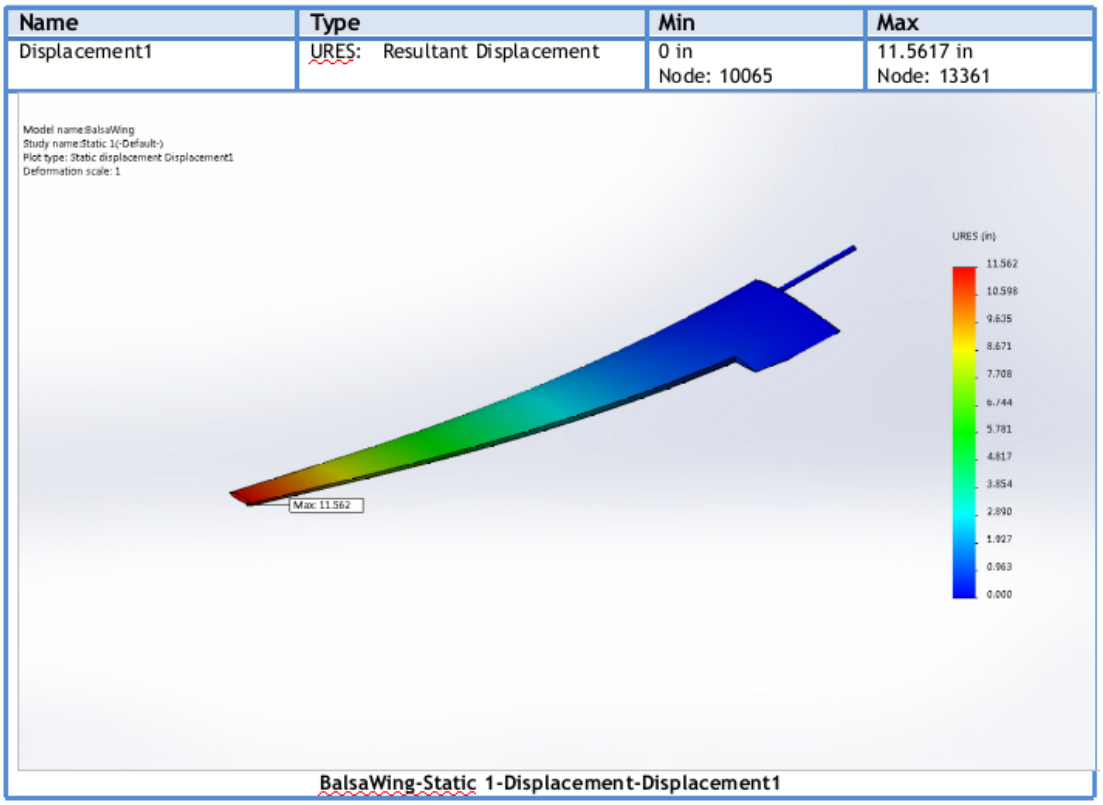

Name	Type	Min	Max

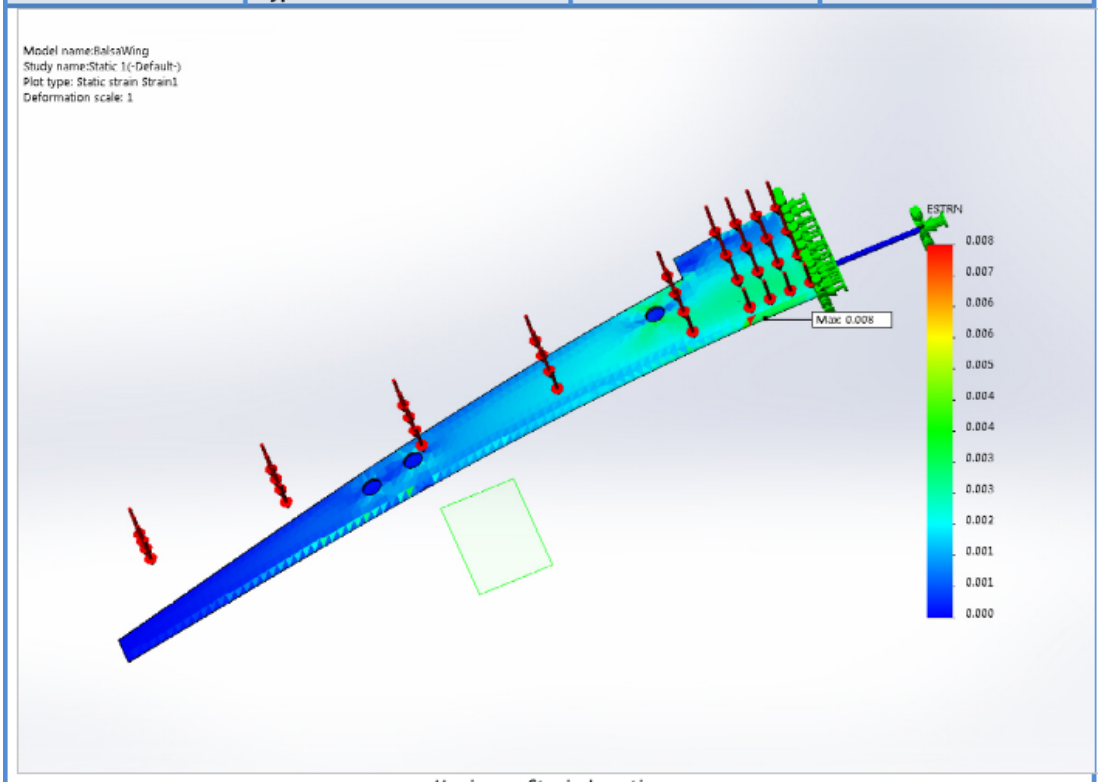

Maximum Strain Location

Name	Type	Min	Max

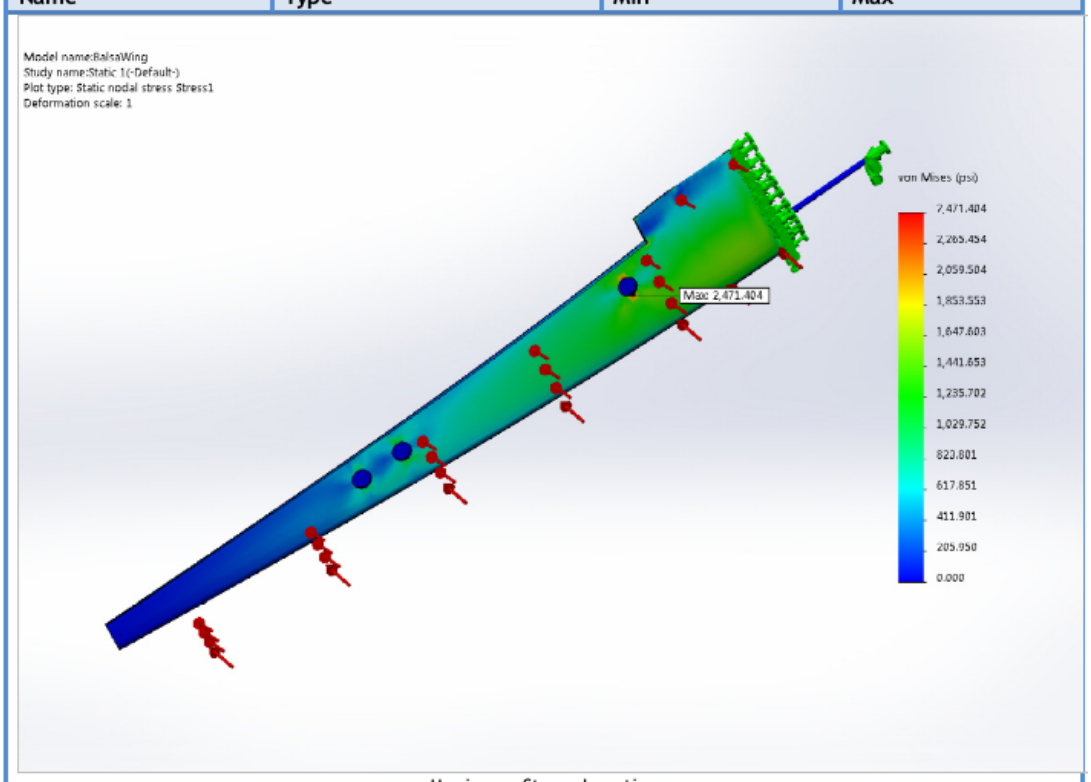

Maximum Stress Location

Composite skin and foam core:

Name	Type	Min	Max
Displacement1	URES: Resultant Displacement	0 in Node: 1	0.73045 in Node: 10001

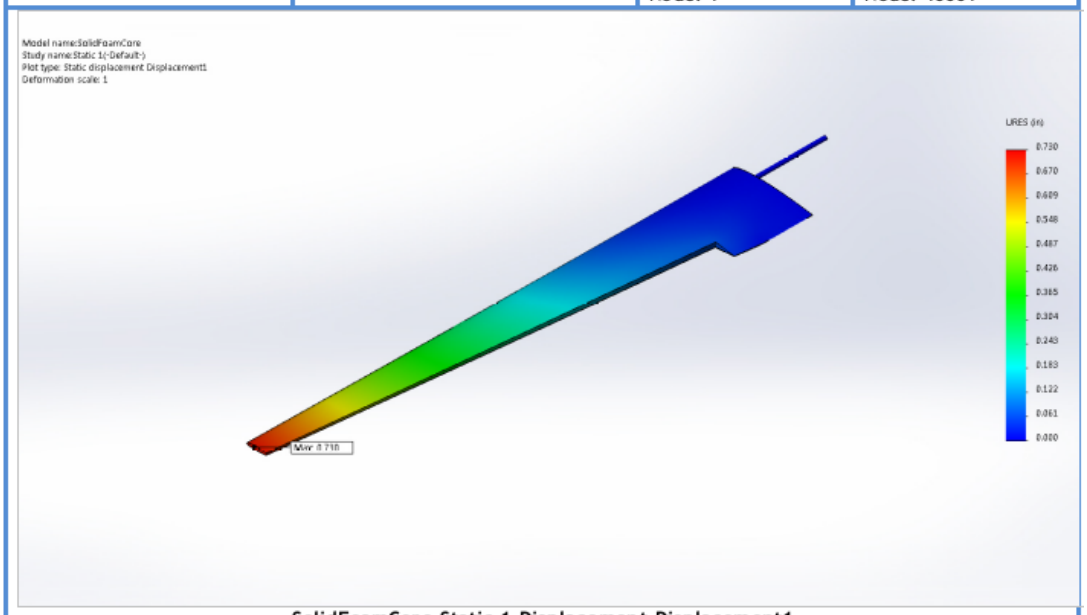

SolidFoamCore-Static 1-Displacement-Displacement1

Name	Type	Min	Max

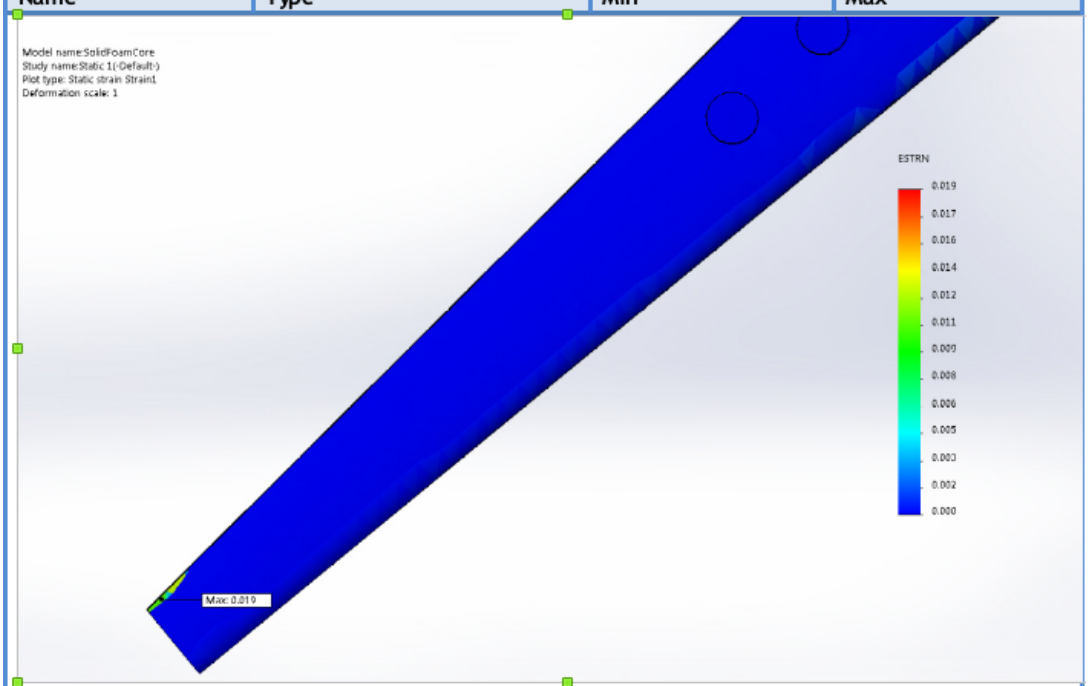

Maximum Strain Location

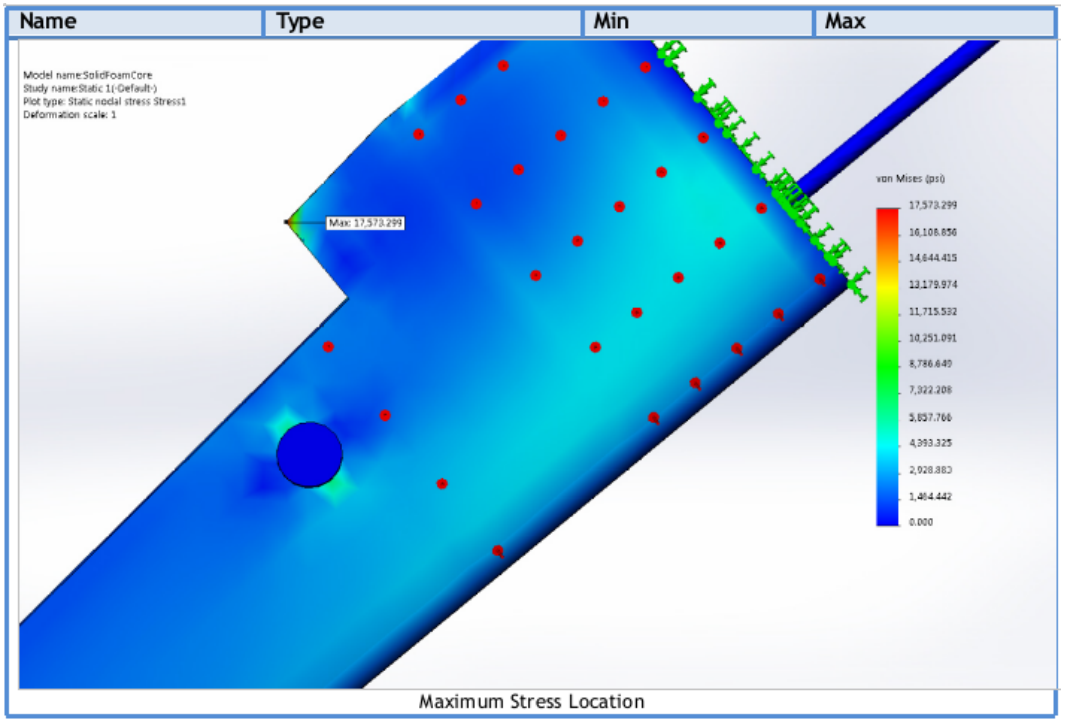

Explanation of Confidentiality

A. *A general description of the nature of the information sought to be protected.*
   - Manufacturing detail and design details for commercial products under development.

B. *An explanation of why the information derives independent economic value, actual or potential, from not being generally known to other persons.*
   - This is the proposed design for our product to be commercialized and contain trade secrets.

C. *An explanation of why the information is not readily ascertainable by proper means by other persons.*
   - The designs described include our intellectual property and are not publicly disclosed at this point in the design cycle.

D. *A general description of any person or entity that may obtain economic value from disclosure or use of the information and how the person or entity may obtain this value.*
   - This information would be beneficial to others designing a solar UAS and/or UAS with a smart battery. With the details provided, competing companies or individuals could bypass the research and development effort and bring competing products to market quickly.

E. *A description of the efforts used to maintain the secrecy of the information.*
   - This information is considered a Packet Digital trade secret and kept confidential.