CITY OF Fargo

Division of Solid Waste
2301 8th Avenue North
Fargo, North Dakota 58102
Phone: 701-241-1449
Fax: 701-241-8109

May 3, 2016

From: Terry Ludlum

Solid Waste Utility Director

2301 8th Ave. N. Fargo, ND 58102

TO: Karlene Fine, North Dakota Industrial Commission

State Capitol – Fourteenth Floor, 600 East Boulevard

Bismarck, North Dakota 58505

Dear Ms. Fine,

On behalf of the City of Fargo, I re-submit herewith a proposal in support of the construction of a Landfill Gas to Compressed Natural Gas fast-fill fueling station to be performed under my direction at the site of the City of Fargo Landfill. I am requesting funding in the amount of $500,000 to be matched by the City of Fargo.

In the following letter we have responded to each of the notes and comments found in the Rating Summary corresponding to specific pages in the proposal document.

Your consideration of City of Fargo's proposal is greatly appreciated.

Sincerely,

Terry Ludlum

Enclosure: Proposal

RESUBMITTAL: Renewable Energy Program

Rating Summary Response: All additions are listed below according to the Rating Summary. Additions in the proposal document refer back to this list (Example: 1.a.i refers to "The introduction of the CNG fueling …").

1. Objectives
    a. Jobs and Public Access
        i. The introduction of the CNG fueling industry to North Dakota would provide jobs and training required for conversion and maintenance of CNG vehicles (See page 17-18, 20-21).
        ii. The conversion and maintenance of municipal vehicles would be conducted through an open market bid (See page 18).
        iii. MinnKota's interest in a partnership and Xcel Energy's commitment to join forces on the CNG project shows strong future of controlled public access for the fueling station. Nationwide, freight and delivery companies have begun to implement CNG as a cost-competitive alternative to diesel. According to the 2014 UPS Corporate Sustainability Report, alternative fuels, such as RNG, will account for 1 billion UPS driving miles by 2017 (United Parcel Service of America). In the FedEx 2016 Global Citizenship Report, FedEx's global alternative fuel vehicle fleet for the fiscal year 2015 included 122 FedEx natural gas vehicles (FedEx). These companies display the potential opportunities for future controlled public access partnerships. Xcel Energy has the infrastructure to supply natural gas to the City of Fargo fueling station if the landfill gas is unavailable (See page 9)

this makes the public access portion of this partnership feasible and reliable.

2. Achievability

   a. Case For Fast Fill

      i. A slow-fill station would perform best in a City where vehicles travel far from the fueling station for the entire day's route. However, under Fargo's fueling strategy all municipal vehicles cycle to the fueling station 2-8 times per day. Considering Fargo's strategy and infrastructure, a fast-fill fueling station more effectively meets the City's vehicle fleet fueling needs (See page 17, 18).

      ii. A redundant compressorhead provides backup for the proposed fast-fill fueling station system. Xcel Energy's commitment to build a substation affords the system back-up gas supply when the LFG supply is insufficient for the load (See page 17).

      iii. At the proposed fueling station site, space is limited. A slow-fill fueling station would mandate the majority of vehicles be stored at the landfill site during fueling. With a fast-fill fueling station, the site will be be utilized to maximize spatial efficiency, while preserving the utility of current municipal vehicle storage space and facilities (See page 17, 18).

      iv. A fast-fill fueling station encourages private partnerships and controlled public access by allowing vehicle fueling that would not limit fueling opportunities due to extended fueling stops (See page 19).

   b. Cost of Vehicle Conversion

i. Vehicle conversion will begin following the completion of the fueling station (Both phases 1 and 2). The timeline and funding for CNG vehicle acquisition will occur through the City of Fargo's standard procurement process (See page 12). Via Solid Waste Division routine tipping fee increases at the landfill, the municipal vehicle fleet will be incrementally converted in 8 years. Additional grants are being considered to expedite the process and decrease the time for a return on investment.

ii. The ROI has been verified with the Discounted Cash Flow (DCF) model and regional data from the DOE (See page 12-15).

3. Methodology
    a. The return on investment calculations have been cross verified by Wenck Engineers and Dr. Huojun Yang (Assistant Professor, College of Engineering) according to the Discounted Cash Flow (DCF) Model.
4. Contribution
    a. While the technology for LFG to CNG conversion already exists, the fueling station is an innovative application of the technology for the region that provides a model for the state of North Dakota to stimulate and diversify economic opportunities (See page 19-20).
5. Awareness
    a. Regionally specific data from the Department of Energy's current data on CNG is now included (See page 12-13).
6. Background
    a. The project is bolstered by extensive experience from the City of Fargo, Xcel Energy, and Wenck in CNG. Xcel Energy can offer industry expertise on CNG

applications, as well as codes and standards to build a safe and reliable system (See page 6, 11).

7. Project Management
    a. Milestones from new Wenck report.
8. Equipment Purchase
    a. Quotes for specific compressors and other equipment included in new Wenck report (See Appendix D, page 61).
9. Facilities
    a. Quotes for facility upgrades are included in new Wenck report (See Appendix D, page 61)
10. Budget
    a. Very simply stated, Phase I of the project consists of converting Landfill gas (LFG) to natural gas (NG) quality product. In 2009, the City of Fargo received an allocation of $2,875,000 for Qualified Energy Conservation Bonds (QECB) from the North Dakota Industrial Commission for Phase I. The QECB will cover $2,375,000 of all Phase I costs. To partially fund Phase II of the project, converting NG to CNG and development of the CNG Fast Fill Fuel Station, this proposal is requesting $500,000 from the Renewable Energy Program. The City will provide $500,000 in matching funds from the balance of the QECB allocation estimated for Phase I ($2,875,000 minus $2,375,000). Any remaining portions of the Phase I (See Appendix D, page 68) and the Phase II (See Appendix D, page 91) estimated costs will be covered by City of Fargo Solid Waste Capital budget. In the interim, City of Fargo will also continue to seek other funds such as grants.
    b. Cost share with private partners based on need.

December 28, 2015

From: Terry Ludlum

Solid Waste Utility Director

2301 8th Ave. N. Fargo, ND 58102

TO: Karlene Fine, North Dakota Industrial Commission

State Capitol – Fourteenth Floor, 600 East Boulevard

Bismarck, North Dakota 58505

Dear Ms. Fine,

On behalf of the City of Fargo, I submit herewith a proposal in support of the construction of a Landfill Gas to Compressed Natural Gas fast-fill fueling station to be performed under my direction at the site of the City of Fargo's main landfill. I am requesting funding in the amount of $500,000 to be matched by the City of Fargo for a duration of 24 months.

We will also be sending the $100 application fee under separate cover from the Auditor's office.

Your consideration of City of Fargo's proposal is greatly appreciated.

Sincerely,

Terry Ludlum

Enclosure: Proposal

TABLE OF CONTENTS

A. PROJECT ABSTRACT 9

B. PROJECT DESCRIPTION 10

1. Objectives 10
2. Methodology 12
3. Anticipated Results 13
4. Facilities 18
5. Resources 19
6. Techniques to Be Used, Their Availability and Capability 20
7. Environmental and Economic Impacts While the Project is Underway 21
8. Ultimate Technological and Economic Impacts 22
9. Why the Project is Needed 22

C. STANDARDS OF SUCCESS 23

D. BACKGROUND/QUALIFICATIONS 23

E. MANAGEMENT 24

F. TIMETABLE 24

G. BUDGET 25

H. CONFIDENTIAL INFORMATION 27

I. PATENTS/RIGHTS TO TECHNICAL DATA 27

APPENDICES

A. Compressed Natural Gas Fueling Feasibility Study - Wenck 28

B. City of Fargo Landfill Gas Collection System 50

C. Gas Leak Detection Methods 64

D. Preliminary Engineering Report - Wenck 66

E. Xcel Energy Letter of Commitment 126

F. Phasing Document - Wenck 127

ABSTRACT

The Fargo Landfill has the potential to act as a compressed natural gas (CNG) vehicle fuel supply source for the City of Fargo's and other commercial entities in the Fargo area. The City landfill produces gas (LFG), which is currently being used for the facility's operational needs with the surplus sold to a commercial partner, Cargill. For an estimated 60+ years, Fargo's landfill will continue to substantially produce LFG that can be harvested, making the landfill a potential renewable source of fuel for the municipal vehicle fleet. In 2009, the City of Fargo received an allocation of $2,875,000 for Qualified Energy Conservation Bonds from the North Dakota Industrial Commission for conversion of LFG to CNG. In this bond allocation, the conversion equipment was estimated at $1,450,000. Based on an ongoing study, Wenck Engineering estimates gas conversion equipment costs to be around $2,300,000 (Appendix D). Due to this new assessment additional funding will be needed to complete the Fast Fill Fuel Station portion of the work which is estimated at $1,000,000. This proposal requests $500,000 from the Renewable Energy Program for the Fast-Fill Fuel Station. The City will provide matching funds from $2,875,000 QECB allocation minus the $2,300,000 estimated conversion equipment cost for the fueling station.

The construction of a CNG fueling station aims to create an energy source for the City of Fargo that is renewable, provides reduced fuel costs, releases fewer emissions, and creates commercial partnerships. This proposal does not support the creation of additional landfills, but takes advantage of an existing energy source. The proposed fueling station will be constructed over a 36 month timeline, costing $1,000,000. The total project cost includes all staging and construction of structures and infrastructures required for a CNG fast-fill fueling station at the landfill site. With the reduced fueling costs, the fueling station is projected to provide a return on investment in less than 2 years for the City of Fargo and the State of North Dakota.

A. PROJECT DESCRIPTION

1. Objectives: Renewable Fuel Source:

Our primary objective is to fully utilize the LFG production that has already proved to be a productive resource of renewable energy for the City of Fargo (See Appendix B for LFG production and revenues) by converting it to CNG to be utilized as a vehicle fuel source for the City and commercial partners (1.a.iii). Xcel Energy has provided a letter ensuring infrastructure support for the project (Appendix E). Nationally, delivery and freight companies show interest in natural gas fueling. According to the 2014 UPS Corporate Sustainability Report, alternative fuels, such as RNG, will account for 1 billion UPS driving miles by 2017 (United Parcel Service of America). In the FedEx 2016 Global Citizenship Report, FedEx's global alternative fuel vehicle fleet for the fiscal year 2015 included 122 FedEx natural gas vehicles (FedEx). These companies display the potential opportunities for future controlled public access partnerships. The primary test application will be for solid waste vehicles, for both city and commercial partners before expansion to other vehicle types in the future.

The landfill's LFG was initially harvested in June, 2002. Since then, the City has sold $2,155,135.04 to Cass County Electric Cooperative and MinnKota Power Cooperative through October 2015. While the methane produced by the landfill varies per season, the LFG resulted in $11,649.39 average monthly payment to the City of Fargo. The past figures indicate a reliable energy source for CNG fueling. Below is the projected lifetime LFG generation of a typical well:

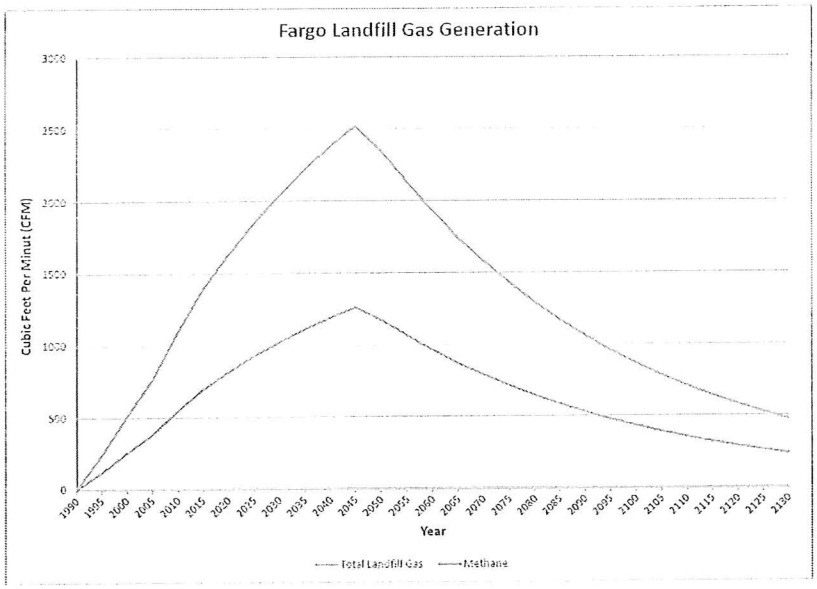

Figure 1: City of Fargo; Division of Solid Waste; *Fargo Landfill Gas Generation*; 2015

<u>Reduced Fuel Costs:</u>

Volatility in the worldwide petroleum-based markets with periods of high-priced diesel has made CNG conversion of fleets a cost-competitive option for fleet vehicles.

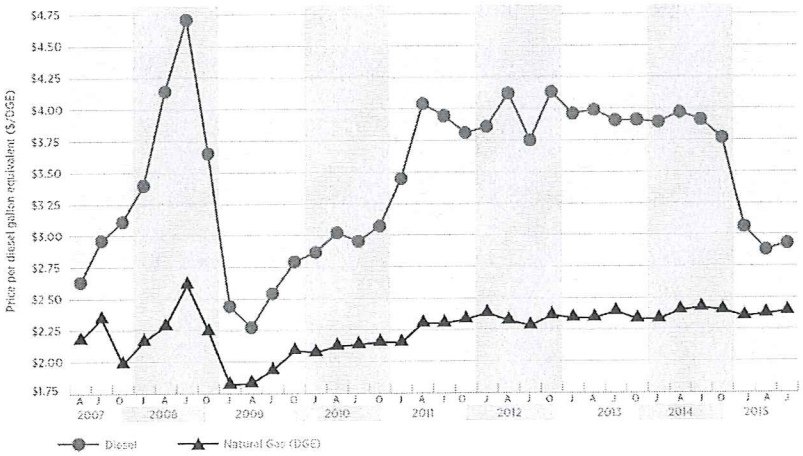

HISTORICAL COMPRESSED NATURAL GAS (CNG) PRICES VERSUS DIESEL

Figure 2: United States; Dept. of Energy; Office of Energy Efficiency and Renewable Energy; Alternative Fuels Data; Bourbon, E.; *Clean Cities Alternative Fuel Price Report*; US Dept. of Energy; 10 Dec. 2015; Web; 10 Dec. 2015

Reduced Emissions:

CNG is a clean, domestically produced fuel that has lower carbon content than gasoline or diesel. When used as a vehicle fuel, CNG burns much cleaner than traditional gasoline or diesel and can reduce carbon dioxide emissions by as much as 30 percent and emissions of toxic pollutants, such as sulfur oxides and nitrogen oxides, by up to 90 percent (US Dept. of Energy). CNG vehicles continue to provide emissions benefits—especially when replacing older conventional vehicles or when considering life cycle emissions.

2. Methodology: 1. Specifications of CNG

Typically, Compressed natural gas (CNG) is Natural gas (NG) compressed to a pressure at or above 2,900 to 3,600 pounds per square inch (psig). NG is a hydrocarbon gas mixture consisting primarily of methane (CH4), but commonly including varying amounts of other higher alkanes, and occasionally a small percentage of carbon dioxide, nitrogen, and/or hydrogen sulfide. NG pressures in transmission and distribution pipelines range from 40 to 1,000 psig. The NG utilized in homes and most buildings is typically delivered at less than 10 psig. CNG has long been recognized as a viable alternative fuel for transit fleets and will generally have moisture removed prior to compression.

Conversion of LFG to CNG

Currently, the City of Fargo-owns and operates a Municipal Solid Waste (MSW) landfill (4501 7th Ave. N.) with an active gas collection system that is comprised of 62 vertical extraction wells, interconnecting piping, a blower system, and an enclosed flare. The system provides a current withdraw capacity of approximately 1,300 scfm (Standard Cubic Feet per Minute) of landfill gas

(LFG). Approximately 300 scfm portion of the LFG is used to operate an on-site 925 kw generator. The generator produces electricity, which is sold to the local utility. The collection system supplies approximately 600 scfm LFG to an off-site facility (Cargill) where it is used as a boiler fuel.

The additional 400 scfm of available LFG could be used for conversion to CNG, which could produce approximately 2,000 gasoline gallon equivalents (GGE) of CNG. In a US Environmental Protection Agency (EPA) report, the City's LFG is approximately 55% methane (CH_4), with the remainder being mostly carbon dioxide (CO_2). Trace amounts of other volatile organic compounds comprise the remainder (<1%). Since LFG contains approximately 1/2 the amount of methane as pipeline NG, there would be a loss in volume during the LFG cleaning process of approximately 50% (400 scfm of LFG would yield roughly 200 scfm of pipeline quality NG).

The landfill has the capacity for a total of 170 wells (additional 108 wells), with an additional 75 available wells in the future east landfill.

3. Anticipated Results

The City of Fargo masterplan for the implementation of CNG fueling is a phased system. The first phase includes upgrades and conversion equipment costs. This proposal focuses on the second phase, funding the CNG fueling station, while the final phase involves the incremental conversion of the municipal vehicle fleet. The anticipated results highlight the long term ROI for the investment in a CNG fueling station given the phase of vehicle conversion. The timeline for CNG vehicle acquisition will occur through the City of Fargo's standard procurement process (2.b.i).

A. Reduced Fuel Cost

The City's current solid waste fleet consists of garbage and recycling collection trucks. A summary of their average driven miles and used diesel fuel is shown below:

Category	Miles/Vehicle	Gallons/Vehicle	Vehicle #	Total Gallons Used
Residential Collection	13,300	3,680	9	33,120

Commercial Collection	15,300	4,270	4	17,080
Roll Off Collection	15,400	4,400	4	17,600
Recycling Collection	12,700	3,200	7	22,400
Total			24	90,200

Table 1. Annual Diesel Usage of Solid Waste Fleet in the City of Fargo

When the City's solid waste fleet is converted to use CNG instead of diesel, there will be a diesel saving of approximately 90,000 gallons. Based on the historical weekly Midwest diesel retail prices from the U.S. EIA (http://www.eia.gov/oog/info/wohdp/diesel.asp) in the past three years (April 2013 to March 2016), diesel has the highest price of $3.992 (March 2014), lowest price of $1.927 (February 2016), and the average of $3.287 (2.b.ii) (5.a).

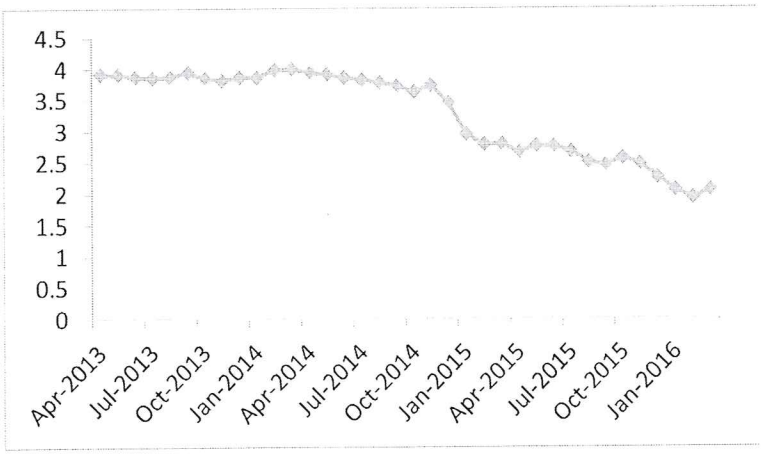

Figure 1. Weekly Midwest Diesel Retail Prices

On the basis of the historical diesel prices and the annual diesel usage, the estimated savings from diesel cost for this CNG project are shown in Table 2 (5.a).

Fuel Cost	Average	High	Low
Annual Saving	$296,500	$360,100	$173,820

Table 2. Diesel Cost Estimate of Solid Waste Fleet in the City of Fargo

Thus, the 24 CNG-trucks are predicted to save over $ 296,500 on average with the highest of $360,100 and the lowest of over $173,820 in fuel annually.

B. Vehicle Cost

According to the most recent VICE (Vehicle and Infrastructure Cash-Flow Evaluation) model from U.S. DOE (Department of Energy), the CNG Trash Truck has $30,300 on incremental cost with 12-year average life cycle, and each truck has 25,000 miles of travel per year, much higher than those of Fargo's current solid waste trucks. The City of Fargo is planning to purchase three new CNG-trucks (with the vehicle investment of $90,900) annually starting the third year, and all the existing 24 diesel-trucks will be replaced with CNG ones in the tenth year. Afterwards, the CNG-trucks will be replaced with new ones when they are retired.

Vehicle Type	Base Fuel Used	Incremental Cost	Avg. Vehicle Miles of Travel	Average Vehicle Life
Trash Truck	Diesel	$30,300	25,000	12 Years

Table 3. Trash Truck Data from DOE

C. Return of Investment for the CNG project

The initial investment of this station is $1,000,000, and there is no earning from the CNG-diesel fuel in the next two years because the station has not set up. Since the third year, CNG fuel will be used in the truck fleet in the City of Fargo and also be available to be sold in the public market. Therefore, two scenarios are discussed as below: 1) the surplus of CNG cannot be sold in the public market; 2) the surplus of CNG will be fully sold in the public market.

1) The surplus of CNG cannot be sold in the public market. The cash flows are shown in Figure 2 during the whole 62 years for this project.

During the total 60+ years life expectation of the Fargo Landfill, one same pattern will be experienced in the cash flows of the CNG station for every 12 years starting the 15th year, i.e., 15th year to 26th year,.., 51th year to 62th year. In this study, the life expectation of Fargo Landfill is assumed as 62 years, including four cash flow cycles with the same pattern.

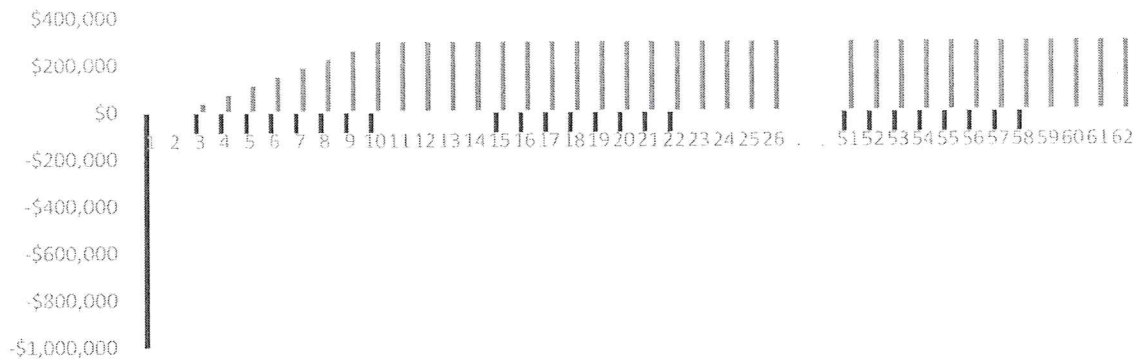

Figure 2. Investment Strategy Visualization (without the surplus of CNG sold)

According to the Discounted Cash Flow (DCF) model, the above cash flows in Figure 2 have the Net Present Value (NPV), Return on Investment (ROI), Internal Rate of Return (IRR), and payback period (DCF model) as shown in the Table 4 for six different discount rates (2.b.ii).

Discount Interest Rate	NPV	ROI	IRR	Payback Period (years)
0.00	$12,115,538	2.61	11.93%	11.33
0.02	$5,881,380	1.91	9.73%	12.00
0.04	$3,021,143	1.30	7.62%	12.89
0.06	$1,573,425	0.82	5.59%	14.15
0.08	$772.189	0.46	3.64%	16.82
0.10	$294,024	0.20	1.75%	22.13

Table 4. Project Returns

When the discount interest rate of 0.04 is assumed, this project will produce a net present value of over 3 million dollars, a return of investment of 1.3 times, an internal return rate of 7.62%, and a payback period of below 13 years (2.b.ii).

2) The surplus of CNG will be fully sold in the public market. The cash flows are shown in Figure 3 during the whole 62 years for this project.

During the expected total 60+ years life of the Fargo Landfill, one same pattern will be experienced in the cash flows of the CNG station for every 12 years starting the third year, i.e., 3rd third year to 14th year, 15th year to 26th year,.., 51th year to 62th year. In this study, the life expectation of Fargo Landfill is assumed as 62 years, including five cash flow cycles with the same pattern.

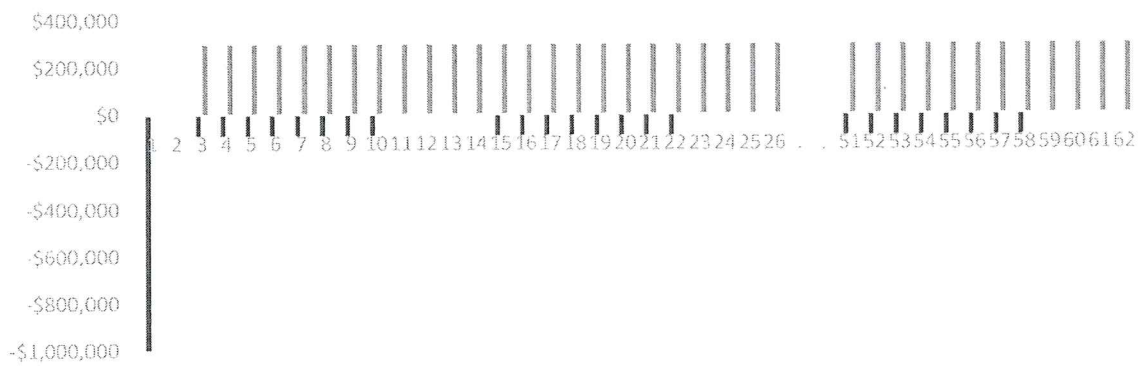

Figure 3. Investment Strategy Visualization (with the surplus of CNG fully sold)

According to the Discounted Cash Flow (DCF) model, the above cash flows in Figure 3 have the Net Present Value (NPV), Return on Investment (ROI), Internal Rate of Return (IRR), and payback period (DCF model) as shown in the Table 5 for six different discount rates.

Discount Interest Rate	NPV	ROI	IRR	Payback Period (years)

0.00	$13,153,244	2.84	18.47%	6.86
0.02	$6,821,812	2.21	16.15%	7.28
0.04	$3,876,006	1.67	13.92%	7.77
0.06	$2,352,739	1.23	11.77%	8.36
0.08	$1,484,569	0.89	9.70%	9.09
0.10	$946,903	0.63	7.70%	10.03

Table 5. Project Returns (with the surplus of CNG fully sold)

When the discount interest rate of 0.04 is assumed, this project will produce a net present value of about 4 million dollars, a return of investment of 1.67 times, an internal return rate of about 14%, and a payback period of below 8 years. The much better performance of this scenario than Scenario 1) shows that the sale of extra CNG to customers other than the City's truck fleet will increasingly improve the financial results of this project.

In addition, the above financial results of the CNG project for two scenarios will be much better when the two following items are taken into consideration. On the one hand, the actual life expectation of Fargo Landfill will be longer than the estimated 62 years, and this will make the station earn more profits for additional years and apportion the initial $1,000,000 CNG station investment. On the other hand, the design capacity of the CNG production is a little higher than the fuel usage demand of the 24 truck fleet, and there will be an annual surplus of 5600 diesel gallon equivalent (DGE) units of CNG which can be sold in the public market. Thus an extra earning of about $18,500 will be brought to this project annually.

4. Facilities

The basic facilities required for this project is the Fast-Fill Fuel Station and a Minor Repair Garage. National Fire Protection Association (NFPA) defines a Minor Repair Garage as a building or portions of a building used for lubrication, inspection, and minor automotive maintenance work,

such as engine tune-ups, replacement of parts, fluid changes (e.g., oil, antifreeze, transmission fluid, brake fluid, air conditioning refrigerants, etc.), brake system repairs, tire rotation, and similar routine maintenance work, including associated floor space used for offices, parking, or showrooms in NFPA 30A. CNG is already in a gaseous form so it will also quickly rise to the highest point in the room and pool there. This needs to be safely managed and following are the facility design elements that will be addressed:

1. Roof/Ceiling shape - ensuring that natural gas (NG) is not trapped at the ceiling level in the event of a release with required venting.
2. Fire Resistance Ratings for roof, walls and partitions (interior and exterior).
3. Gas/Flame/Fire Monitoring, Detection and Alarm systems – including types of systems, placement of systems, interoperability of these systems.
4. Fire Suppression systems – including types of suppression agents and the hierarchy of operation between combustible gas monitoring and alarm systems and fire alarm system activations.
5. Emergency Shutdown Device (ESD) systems – including interlocking of the various alarm systems with local and remote annunciation and building systems responses such as increasing the ventilation rate and activating an audible/visual alarm system.
6. Facility Operations & tools – Proper separations where several operations are taking place in close proximity to each other involving different fuels such as diesel or CNG.
7. Defueling system – it is often necessary to defuel a vehicle before repairs can proceed. Defueling has safety, environmental and commercial issues that will be addressed.

5. Resources

Bruce Grubb and Terry Ludlum, the City of Fargo's City Administrator and Solid Waste Utility Director, were the primary leaders of the original LFG harvesting at the landfill site (6.a). Terry

Ludlum will lead the construction of the Fast-fill station with Bruce Grubb as an invaluable resource along with other city engineers and managers. Wenck Engineering will serve as the consulting engineers and have prepared the feasibility and phasing pre-engineering documents for the City. They have in-house expertise in LFG to CNG conversion. Wenck specializes in engineering design, sustainability, facilities and process engineering, and environmental compliance and permitting. Dr. Huojun Yang, an assistant professor at NDSU, with research expertise in smart buildings, energy efficiency, and renewable energy systems and fuels, will be available to the City of Fargo as a resource based on contract. Dr. Yang has conducted several research projects funded with over two million dollars by different sponsors such as the California Energy Commission (CEC).

6. Techniques to Be Used, Their Availability and Capability

The conversion of clean LFG to CNG is a well understood process of mechanical compression. However, due to pressure differential gas leaks in such a system are a concern in pipelines, fuel station and repair garage. There are a variety of methods that can detect natural gas pipeline leaks, ranging from manual inspection to advanced satellite based hyperspectral imaging. The various methods can be classified into non-optical and optical methods. The primary non-optical methods include acoustic monitoring; gas sampling, soil monitoring, flow monitoring, and software based dynamic modeling (see short description of leak detection techniques in Appendix C). Prior to the conversion, the LFG will need to be cleaned. This work will be completed by the equipment and infrastructures included in the QECB allocation. Technology currently exists to clean LFG to pipeline NG quality. Per the Wenck report (appendix A) LFG consists of approximately 45-60% methane, 40-60% carbon dioxide, 2-5% nitrogen, 0-1% non-methane organics, and trace amounts of inorganic compounds. This requires removal of moisture, sulfides, siloxanes, oxygen, nitrogen, and other impurities. The proposed LFG cleaning system would

require about 190 amps at 480 volts and would be sized to utilize 100 scfm of LFG which would produce approximately 500 GGE per day of CNG. The CNG equipment will require 400 amps at 480 volts of power. Xcel Energy has indicated that the existing power infrastructure in the landfill area is large enough to handle the proposed load. In a recent letter (See Appendix E) Xcel energy has committed to provide back-up supply gas for the system when LFG is insufficient for the load (2.a.ii). While varied approaches to CNG fueling stations exist, a fast-fill station is the best option for Fargo's vehicle fleet. The City of Fargo's vehicle fleets cycle to the fueling station 2-8 times per day (2.a.i). With the limited space at the landfill site, an overnight slow-fill fuel station would not accommodate a high percentage of the municipal vehicle fleet (2.a.iii). While a fast-fill fueling station compressorhead failure can lead to a disruption of services, this project implements a redundant compressorhead to maintain system operations (2.a.i).

7. Environmental and Economic Impacts While Project is Underway

As the construction will take place at the Landfill site, the environmental impacts will be limited to standard construction site practices. The economic impacts while the project are underway includes the construction costs of the project that are included in this grant and previous QECB allocation as well as the jobs and training required for the construction of CNG facilities (1.a.i). The later conversion of municipal vehicles will be conducted through an open market bid, encouraging controlled public access and economic growth (1.a.ii). A slow-fill fueling station would severely limit the potential for future partnerships with private entities, while the fast fill fueling station would not require the overnight storage of private vehicles on the landfill site (2.a.iv). This proposal does not support the creation of additional landfills for LFG production. Important to note here is that City of Fargo is contemplating tremendous strides in garbage reduction with single stream recycling. Therefore, this project only uses what is available currently and anticipated in the future while reducing garbage production.

8. Ultimate Technological and Economic Impacts (Both Models)

Given the total project cost of $1,000,000 ($500,000 from the Renewable Energy Program + $500,000 matching provided by the City from QECB allocation), the estimated average annual fuel savings result of 24 solid waste trucks in Table 2 is $296,500. During the gradual conversion of trucks to CNG, the adjusted payback period is conservatively 14.15 years. Accounting for the **14.15** year cycle for payback, City of Fargo will receive payback over 4 times, given 60 year lifespan / 14.15 = **4.24.** The savings will accrue as the City phases its fleet to CNG over time using some grant funding and mostly current operational funding for vehicle replacement and conversion and training. The estimate provided above is the ROI after 24 vehicles are converted. With an estimated 60 year supply of LFG, the project will provide a return on investment of over 35 times. Additionally, the project will introduce the CNG industry to the state of North Dakota, providing jobs and training for conversion and maintenance of CNG vehicles (1.a.i). **For a more detailed analysis that includes various other factors such as training, O&M, inflation resulting in longer ROI see Section 6 of Appendix A.**

9. Why the Project is Needed

The feasibility of CNG is on the rise and it is rapidly becoming the alternative fuel of choice for vehicle fleets across the country. Transit buses are the largest users of natural gas vehicles and waste collection vehicles is the fastest growing sector using natural gas (American Public Transit Association). City of Fargo's landfill facility has already demonstrated the reliable production and profits from LFG gas for over a decade. This project will further demonstrate the utilization of waste (LFG) as a commercially viable renewable vehicle fuel source and in addition, it will show that CNG has a demand and market where the state of North Dakota can become a CNG leader by using LFG and CNG (as back-up) resources for CNG production. The City's current vehicle fleet travels a total 109,360 miles per year. The significant expenditure associated with this is

necessary for daily City operations for which CNG is a viable alternative to diesel. Since there are no CNG fueling stations, conversion or maintenance facilities in the Fargo area this environmentally beneficial option is currently unavailable for municipal or commercial use. While the technology for LFG to CNG conversion exists, the application of this project is an innovative application of the technology that can act as a model for the state of North Dakota. With this project, the City of Fargo can demonstrate leadership toward a cleaner, less expensive, and economically viable fuel source (4.a).

10. Standards of Success

This project will further develop North Dakota's renewable and clean energy resources in several ways. CNG can provide a cleaner and less expensive fuel alternative. When produced from converting LFG from landfills, CNG provides a cost-effective **renewable** resource with a viable return on investment. In Fargo, the landfill will continue to provide a renewable source of energy for many decades. The introduction of CNG to the Fargo-Moorhead metropolitan area creates many additional opportunities for the education and training of vehicle conversion, service and maintenance businesses and technicians. Since, the conversion source fuel can be LFG or NG, this small fueling station has the potential to lay the foundation for an economically viable renewable energy source in CNG fuel. Whether CNG is produced with landfill gas (LFG) or natural gas (NG) it can provide a commercial opportunity for North Dakota and beyond (1.a.i)

11. Background/Qualifications

Terry Ludlum is the City of Fargo's Solid Waste Utility Director. Wenck Engineering is a leader in construction, engineering, emergency response and environmental consulting, serving Minnesota, North Dakota, South Dakota, and Wyoming, Colorado and Georgia (14 branch offices and 300 employees). Wenck offers strategic engineering, environmental and consulting services; construction and project management; and emergency spill response and remediation. Dr Huojun

Yang from NDSU offers several years of experience and expertise in building energy efficiency and renewables research (6.a).

12. Management

The Point of Contact, will be the City of Fargo's Solid Waste Utility Director and will oversee the project's completion. The current Director, Terry Ludlum, already having seen the original LFG harvesting to completion, has experience exhibiting an ability to ensure projects reaching full potential. As Solid Waste Utility Director for the City of Fargo, Terry Ludlum has maintained and monitored the daily operations of the landfill site. The budget provides an allocation for Site Planning and Engineering, which includes phasing for progress reports which will be prepared by Wenck Engineering in collaboration with the City of Fargo. This report, when implemented by Ludlum, will ensure the project's adherence to scheduled progress.

13. Timetable

For detailed visual graphic of phasing, see Appendix F.

Start Date	Duration	Phase 1 (QECB allocation)
7/1/16	30 days	Prepare Request for Proposal for Equipment
8/1/16	30 days	Advertise for Equipment
9/1/16	45 days	Select/Procure Equipment
10/3/16	6 wks	Equipment Shop Drawings Reviewed/Approved
12/1/16	26 wks	Building and Delivery of Equipment
2/1/17	8 wks	Design of Balance Plant
5/1/17	3 wks	Prepare Bid Documents for General Installation Contractor

7/3/17	4 wks	Award Contract
8/1/17	6 wks	Construction Phase
10/2/17	2 wks	Startup and Training
Start Date	Duration	Phase 2 (REP + QECB allocation)
3/1/18	30 days	Prepare Request for Proposal for Equipment
4/2/18	30 days	Advertise for Equipment
6/1/18	45 days	Select/Procure Equipment
7/2/18	6 wks	Equipment Shop Drawings Reviewed/Approved
9/3/18	26 wks	Building and Delivery of Equipment
11/1/18	8 wks	Design of Balance Plant
1/1/19	3 weeks	Prepare Bid Documents for General Installation Contractor
3/1/19	4 weeks	Award Contract
7/1/19	6 weeks	Construction Phase
9/2/19	2 weeks	Startup and Training

14. Budget

Following is the budget proposal for the Phase I and Phase II parts of this project:

Qualified Energy Conservation Bonds (QECB) 2009: $2,875,000

Phase I costs covered by QECB bonds: $2,375,000 (see page 92 for detailed Phase I budget)

Remaining QECB 2009 funds to be used as 50% match for Phase II: $500,000

Phase II costs covered by this proposal (see next page - 27):

Fast-fill fueling station : $545,000

Storage at fueling station : $450,000

Partial Engineering : $5,000

TOTAL : $1,000,000

Request from grant: $500,000

Note: The rest of the costs of Phase I and Phase II that are not covered by the QECB Bond allocation will be part of the City of Fargo's Solid Waste Capital budget. In the interim, City of Fargo will also continue to seek other funds such as grants.

Project Associated Expense	**Estimated Cost**	**NDIC Share**	**Applicant Share**	**Notes**
Low Pressure Storage Tank	$155,000			Max. 250 psig
400 cfm CO_2 & Compression	$1,332,800			
Storage at Fueling Station	$450,000			3 Tank System
Fast Fill Fueling Station	$545,000			With Card Reader
Total Equipment	**$2,482,800**			
Site Preparation	$100,000			
Startup Services	$80,000			Fueling Station
Total Site Prep & Startup	**$280,000**			
Final Engineering (6%)	$165,800			

Total Construction	$2,928,600			
Contingency (20%)	$585,700			
Overall Total CNG & Fueling	**$3,514,300**			

*The engineering assumptions include: One 40 - 75 scfm compressor, 5 - 15 psi inlet gas pressure, 16,250 scf storage (129 gge), and one dual-hose metered dispenser. Total installation costs are and an estimated 50% equipment costs. (Application examples: Public retail station serving 50–80 light/medium-duty vehicles fueling 10 gge/day or Private fleet station serving 45–65 taxis fueling 12 gge/day).

** In 2009, the City of Fargo received an allocation of $2,875,000 for Qualified Energy Conservation Bonds from the North Dakota Industrial Commission. In this bond allocation, the conversion of LFG to CNG gas equipment was estimated at $1,450,000. Based on an ongoing study, a preliminary estimate by Wenck Engineering revealed that the actual cost of the equipment is estimated to be around $2,300,00 (report available March 2016). Due to this new assessment, additional funding will be needed to complete the Fast Fill Fuel Station. This proposal requests $500,000 from the Renewable Energy Program for the Fast Fill Fuel Station. The difference between the estimated $2,300,000 and the $2,875,000 QECB allocation will serve as the matching funds for the Renewable Energy Program.

15. Confidential Information

There is no confidential information in this proposal.

16. Patents/Rights to Technical Data

Patents/Rights to Technical Data does not apply to this project.

Appendix A

Compressed Natural Gas Fueling Feasibility Study

Wenck File #0208-126 **December 2014**

Compressed Natural Gas Fueling

Feasibility Study

Prepared for:

CITY OF FARGO, NORTH DAKOTA

Prepared by:

Wenck associates, inc.

3303 Fiechtner Drive

Suite 100

Fargo, North Dakota 58103-8730

(701) 297-9600

Table of Contents

EXECUTIVE SUMMARY..... 1
1.0 Introduction.. 1-4
2.0 CNG Overview.. 2-5
2.1 General Specifications of CNG. 2-5
2.2 CNG Advantages And Disadvantages. 2-6
2.3 Safety Precautions. 2-6
2.4 Staff Training. 2-6
2.5 Fuel Storage. 2-7
2.6 Fueling. 2-7
2.7 Maintenance And Reliability. 2-8
2.8 Environmental Impacts And Emissions. 2-8
2.9 Lessons Learned From CNG Vehicle Fuel Users. 2-9
3.0 City of Fargo Vehicle Fleet Data. 3-1
3.1 Fleet Summary. 3-1
3.2 Vehicles Recommended For CNG Fuel 3-2
4.0 Potential Fueling Site Locations. 4-1
4.1 Central Garage. 4-1
4.2 City Landfill 4-2
4.3 Conversion of LFG to
CNG.....4-3
5.0 Existing Building Modifications. 5-5
5.1 Building Modifications. 5-5
6.0 Economics Evaluation.. 6-6
7.0 RECOMMENDATIONS. 7-9

EXECUTIVE SUMMARY

Introduction

The City of Fargo (City) hired Wenck Associates, Inc. (Wenck) to complete a feasibility Study to assist them with the possible incorporation of Compressed Natural Gas (CNG) as a vehicle fuel in its transit buses and solid waste collection trucks. Historically, the buses and trucks have utilized diesel fuel. The City also wanted to consider pipeline CNG (Xcel Energy) and Landfill Gas (LFG) as potential CNG fuel sources. LFG would require specialized equipment to convert the LFG to CNG. Fuel costs are typically one of the largest annual expenses for many fleet vehicle operations. The projected market price for CNG could make it a viable option for the City to reduce annual operating costs for some of its fleet vehicles.

Background

The City's current vehicle fleet includes cars, pickups, trucks and buses. Existing data analyzed for this report includes usage from fixed route transit buses, Solid Waste collection vehicles, and police patrol vehicles.

Transit buses are categorized as fixed route transit buses and para-transit buses. A summary of the average miles driven and diesel fuel used is shown below:

Category	Miles per Year	Gallons Used
Fixed Route Buses	30,300	6,500
Para-transit Buses	22,360	2,380

Solid Waste collection vehicles are categorized into four different types based on the service being performed. A summary of the average miles driven and diesel fuel used is shown below:

Category	Miles per Year	Gallons Used
Residential Collection	13,300	3,680
Commercial Collection	15,300	4,270
Roll Off Collection	15,400	4,400
Recycling Collection	12,700	3,200

Some of the challenges involved with the utilization of CNG in fleet vehicles include:

- Selection of a location for a CNG fueling station
- Retrofit of existing buildings to be used for maintenance and storage of CNG vehicles

Two potential locations for a CNG fueling station were identified in this study. The two locations were Central Garage and the City Landfill. Regardless of the location, significant modifications

would be required to both Central Garage and the Metro Transit Garage to accommodate maintenance and storage of CNG vehicles to meet building code requirements. The primary concern with buildings used for the storage and maintenance of CNG vehicles is the potential release of natural gas from the vehicles.

With respect to the CNG fueling station, there are typically minor emissions of natural gas that escape through the seals on the compressor units. Natural gas can also escape through vents on top of the compressor units. Natural gas emissions are typically greater during cold weather. In addition, there can also be minor emissions from the breakaway couplings, especially during cold weather when the metal and sealing ring may not tightly seal.

With respect to the CNG vehicles, emissions are expected to be significantly lower than gas or diesel vehicles in the common air pollutants of nitrous oxide (NOx) and particulate matter (PM). Typical emission values for CNG vehicles are 50% lower in NOx and 80% lower for PM.

Evaluation of Options

On May 28, 2014, the City was notified by the North Dakota Industrial Commission of approval of a bonding allocation under the State's Qualified Energy Conservation Bond (QECB) program. QECBs are interest free bonds that can be sold by project sponsors to finance "qualified" renewable energy projects. Projects related to the utilization of LFG are considered qualified projects. The bonding allocation was in the amount of $2,875,000 for a project to convert LFG to CNG. As such, four options were evaluated in this study for comparative purposes as listed below:

1. **Pipeline CNG Fueling Station at Central Garage (Vehicle Fuel)**
2. **Pipeline CNG Fueling Station at the Landfill (Vehicle Fuel)**
3. **LFG Conversion to CNG Fueling Station at the Landfill (Vehicle Fuel)**
4. **LFG Conversion to CNG at the Landfill (Generator Fuel)**

Options 3 and 4 above qualify for the $2,875,000 QECB bonding allocation due to the use of LFG.

A brief summary of the economic evaluations performed on each option is shown on the following table:

Economic Evaluations

Option	Capital Cost Estimate	O&M Cost Estimate	Project Payback Period
1 – Pipeline CNG Central Garage	$4,234,000	$75,000/year	16 Years
2 – Pipeline CNG Landfill	$4,234,000	$75,000/year	16 Years
3 – LFG to CNG Landfill (Vehicles)	$6,284,000	$120,000/year	25 Years

4 – LFG to CNG Landfill (Generator)	$1,305,000	$40,000/year	1 Year

Recommendations

The technical evaluations performed in this study indicate that the use of CNG as a vehicle fuel is technically feasible for the City of Fargo. However, there are no maintenance or storage garages that service CNG vehicles at this time. Cummins NPower was contacted by City maintenance staff and indicated they were willing to consider maintenance services for CNG vehicles, but would need 2-3 years to retrofit their facility. Therefore, Options 1-3 above included a retrofit of both Central Garage and the Metro Transit Garage to accommodate maintenance and storage of CNG vehicles.

The economic evaluations performed in this study indicate that the use of CNG as a vehicle fuel is "feasible" depending on funding availability and the City's comfort level with the calculated payback periods. Since the City's QECB allocation of $2,875,000 can only be applied to projects involving the use of LFG, Options 1 and 2 would require the City to provide 100% of the up-front financing for these options. Since Option 3 exceeds the QECB allocation amount, the remainder of the project costs would require City up-front financing for this option.

Based on the economics of the four options and the need for retrofits of Central Garage and Metro Transit Garage, it is recommended that the City take a phased approach to the utilization of CNG. Due to the QECB requirements related to LFG, it is recommended that the first phase be the implementation of Option 4 to convert LFG to CNG for the landfill generator. This would allow the entire project to be financed through the State's QECB allocation and limit the City's initial financial obligation. Once the LFG conversion project is operating successfully, a second phase could be considered to add a CNG fueling station, acquire CNG vehicles and retrofit Central Garage and Metro Transit Garage.

It was recently discovered that the Federal Transit Administration (FTA) has grant funding available for CNG implementation and its related costs such as fueling stations, facilities retrofits and vehicle acquisitions. Therefore, based on discussions with staff members from Central Garage, Metro Transit Garage and Solid Waste, it is also recommended that a portion of the QECB allocation be used for a new contract employee for the purpose of grant writing in advance of the second phase of CNG implementation.

1.0 Introduction

The popularity of CNG is on the rise and it is rapidly becoming the alternative fuel of choice for an increasing number of fleets across the country. Transit buses are the largest users of natural gas vehicles and waste collection vehicles is the fastest growing sector using natural gas (American Public Transit Association). High diesel fuel prices and volatility in the petroleum-based markets worldwide has made CNG conversion of fleets a cost-competitive option for fleet vehicles. CNG conversion has the added benefits of reducing our nation's dependence on foreign energy sources and reducing exhaust emissions.

The environmental benefit/impact of using CNG vehicles is significant. CNG is a clean, domestically produced alternative fuel that burns cleaner than conventional gasoline or diesel due to its lower carbon content. When used as a vehicle fuel, it can offer life cycle greenhouse gas (GHG) emissions benefits over conventional fuels, depending on vehicle type, drive cycle, and engine calibration. In addition, using natural gas can reduce certain types of tailpipe emissions.

Tailpipe emissions result from fuel combustion in a vehicle's engine. The emissions of primary concern include the regulated emissions of hydrocarbons, oxides of nitrogen (NOx), carbon monoxide (CO), as well as carbon dioxide (CO_2). Due to increasingly stringent emissions regulations, the gap has narrowed between tailpipe emissions benefits from natural gas vehicles (NGVs) and conventional vehicles with modern emissions controls. This is a direct result of the U.S. Environmental Protection Agency (EPA) requiring all fuels and vehicle types to meet the same thresholds for tailpipe emissions of air pollutants. Still, CNG vehicles continue to provide emissions benefits—especially when replacing older conventional vehicles or when considering life cycle emissions.

When used as a vehicle fuel, CNG burns much cleaner than traditional gasoline or diesel and can reduce carbon dioxide emissions by as much as 30 percent and emissions of toxic pollutants, such as sulfur oxides and nitrogen oxides, by up to 90 percent (US Dept. of Energy).

The City is interested in the possibility of using CNG in some of their fleet vehicles. City vehicles being considered are City refuse trucks, transit buses, and other fleet vehicles. The lack of CNG fueling stations, however, has limited its use in many areas of the country. Currently, there are no CNG fueling stations or maintenance facilities in the Fargo area.

2.0 CNG Overview

Natural gas (NG) is a fossil fuel that is collected from gas wells and is purified before distribution to customers. Odorants are added as a safety measure for detection. CNG has long been recognized as a viable alternative fuel for transit fleets.

2.1 General Specifications of CNG

NG is primarily comprised of methane (CH_4). The characteristics of the NG can vary slightly depending upon the source(s) of the natural gas and the requirements of the NG pipeline company. Generally, NG is considered to have a thermal value of 1,000 British thermal units per cubic foot (Btu/cf) with minor amounts of hydrogen sulfide, moisture, nitrogen, and oxygen. The minor amounts are to be low enough to protect the pipeline and most general users from corrosion and other hazards. NG usually has to be conditioned (i.e., cleaned) for use in fuel cells, vehicles, and other devices that essentially require pure methane.

NG is a gas at temperatures greater than minus 258°F (minus 161°C). NG generally has a specific gravity of 0.6. For safety reasons, a mercaptan (an odorant), is added to NG for leak detection. The approximate auto-ignition of NG is about 1,000°F (540°C). The flammability limits are about 5 to 15% volume concentrations with air.

NG pressures in transmission and distribution pipelines range from 40 to 1,000 pounds per square inch (psig). The NG utilized in homes and most buildings is typically delivered at less than 10 psig.

Compressed natural gas (CNG) is NG compressed to a pressure at or above 2,900 to 3,600 psig. CNG used for vehicle fuel will generally be dried (i.e., have moisture removed) prior to compression.

2.2 CNG Advantages And Disadvantages

There are both advantages and disadvantages to the use of CNG as a vehicle fuel, particularly when compared to diesel fuel. Horsepower, acceleration and cruise power are generally the same between a CNG-fueled vehicle and a diesel-fueled vehicle. The driving range of CNG vehicles is generally less than diesel vehicles because less overall energy content can be stored in the same size tank. Extra or larger CNG storage tanks can help increase range for larger vehicles. The general advantages and disadvantages of CNG (versus diesel) are listed below.

ADVANTAGES:

- Lower fuel costs compared to diesel
- Cleaner emissions
- Quieter engines
- Predominately domestic fuel supply compared to diesel and gasoline

DISADVANTAGES:

- Higher cost of CNG vehicles
- May require modifications to buildings where CNG-fueled vehicles are stored and/or maintained
- Cost of CNG fueling station
- Larger vehicle tanks needed for same range.

2.3 Safety Precautions

City staff has extensive experience handling and using diesel fuel and gasoline. This is due to training and familiarity with these fuels and associated equipment. The safety precautions for CNG will differ because it is in a gaseous state at all times. Similar safety precautions related to vapors from diesel and gasoline will also be applicable to CNG, such as avoiding ignition sources and proper venting of fumes/gases.

The primary "new" hazard is related to the use of a compressed gas (similar to compressed welding gases) where the release of high-pressure gas can be dangerous. Extra care must be taken when opening valves or loosening fittings.

2.4 Staff Training

It is important to provide training to the operations and maintenance staff, as well as, vehicle operators. Since CNG would likely be a new fuel for City staff, proper training of personnel is critical to maintaining a safe work environment. All staff that operate, maintain or utilize the CNG fuel should have initial training prior to start-up of the CNG fueling system. Follow-up training will likely be necessary following start-up. It is also recommended that maintenance staff should also present during construction and installation of the CNG fueling system.

2.5 Fuel Storage

Steel cylinders or globes are used for storage of CNG for fast-fill systems. For time-fill systems there is no storage. Storage cylinders are usually above ground and in multiples of three. The storage cylinders or globes are usually placed near the CNG compressors and have restricted access. The pressure in these storage devices is above 3,500 psig.

2.6 Fueling

There are two types of CNG fueling systems, fast-fill and time-fill. Fast-fill systems function similar to current diesel and gasoline filling. Time-fill systems take many hours so is typically done while vehicles are parked overnight or whenever not in use for an extended period of time.

Fast-fill systems use a familiar-looking dispenser with one or two hoses. The time to fill a vehicle with CNG is similar to that for diesel and gasoline. A single dispenser can handle many vehicles. The fuel is taken from a CNG storage tank, not directly from the CNG compressors. Fast fill fueling stations include a filling hose and a venting hose (similar to gasoline hoses in some urban areas). Natural gas nozzles attached to the end of the filling hose lock onto vehicle receptacles, and form a leak-free seal, similar to the coupling on an air compressor nozzle. The receptacles are designed so that, when the nozzle is removed, the gas is prevented from escaping.

Time-fill is typically utilized to fuel multiple vehicles at same time. The fueling occurs while the vehicles are parked and takes a number of hours to complete. The fuel is supplied directly from CNG compressors with the length of fueling time dictated by the amount needed in each vehicle, number of vehicles being filled at the same time, and ambient pressure (filling takes longer during cold weather).

2.7 Maintenance And Reliability

CNG vehicles are nearly identical to conventional gasoline-fueled vehicles, with the exception of the fuel storage and delivery system. They use an internal combustion engine that looks and performs essentially the same as a gasoline-fueled engine. Therefore, the differences between a CNG vehicle and a diesel vehicle will be fuel storage, fuel delivery system, and spark plugs.

The most important added maintenance requirement for CNG vehicle is to have the fuel storage cylinders inspected at regular intervals and after accidents or suspected damage and to replace them when they reach the end of their useful life.

CNG is much more sensitive to spark quality and voltage. It is very important that all parts of the ignition system (e.g., spark plugs, wires, coils) be properly maintained and protected from excessive heat and other damage.

Since CNG is a cleaner burning fuel than diesel, the oil will last longer for a CNG vehicle than for a diesel vehicle.

Maintenance and reliability of the CNG vehicles is expected to be similar to diesel vehicles. One notable difference is that CNG engines have spark plugs.

Maintenance and reliability of the CNG fueling system is expected to be similar to that of a diesel fueling system. Maintenance for CNG deals with high-pressure gas while diesel involves combustible liquid.

2.8 Environmental Impacts And Emissions

For CNG fueling equipment, there are minor emissions of NG from the compressor units through the compressor seals. These are released through a vent on top of the compressor unit. Emissions are usually greater during cold weather. There are minor emissions from the breakaway coupling, especially during cold weather when the metal and sealing ring may not tightly seal.

The emissions from CNG vehicles are expected to be significantly lower in the common air pollutants of nitrous oxide (NOx) and particulate matter (PM). Commonly used values are 50% lower in NOx and 80% lower for PM. When comparing to diesel emissions, the reduction percentage will depend upon the exhaust gas equipment on the diesel vehicles. It is expected that the newer diesel vehicles will have cleaner emissions than the older diesel vehicles.

2.9 Lessons Learned From CNG Vehicle Fuel Users

Some of the major lessons learned from current CNG fuel users in northern climates are:

- Provide training to the operation and maintenance staff of the CNG filling system prior to start-up. Follow-up training after a few months of operation is also beneficial.
- Ensure adequate heaters within the various equipment enclosures and panels.
- Ability to remotely monitor the CNG filling system by maintenance staff is useful as opposed to responding to alarm warnings.
- Provide a shelter around the fueling equipment to facilitate monitoring and maintenance of the equipment. The shelter does not need to be heated, but provides protection of the equipment from weather and outdoor elements.
- The hose breakaway connector can be expected to experience some leakage, particularly during cold weather.

3.0 City of Fargo Vehicle Fleet Data

Information on the various vehicles being considered for using CNG was supplied by the City. Initially, the solid waste collection trucks and fixed route transit buses were considered for CNG fuel. Optionally, police patrol cars were identified as potential candidates for future CNG consideration.

3.1 Fleet Summary

The City's current fleet vehicles include cars, pickups, trucks and buses. Existing data analyzed for this report consisted of usage records from fixed route transit buses, solid waste collection vehicles, and police patrol vehicles.

Transit buses are classified as fixed route and para-transit. Fixed route buses average 30,300 miles per year and use approximately 6,500 gallons of diesel fuel per year. Para-Transit buses average 22,360 miles per year and use approximately 2,380 gallons of diesel fuel.

Solid waste collection vehicles are classified as residential, commercial, roll-off and recycling. Residential collection vehicles average 800 hours per year and use approximately 2,300 gallons of diesel. Commercial collection vehicles average 710 hours per year and use approximately 1,850 gallons of diesel. Roll-off collection vehicles average 1,675 miles per year and use approximately 1,500 gallons of diesel. Recycling collection vehicles average 595 hours per year and use approximately 1,340 gallons of diesel fuel.

Police patrol vehicles average approximately 24,000 miles per year and use and average of 2,150 gallons of gasoline.

Table 1 below provides vehicle details used for the study.

Table 1

3.2 Vehicles Recommended For CNG Fuel

The City's fleet vehicles that were evaluated in this CNG were the solid waste collection vehicles and fixed route transit buses. This decision was based on annual operating and usage data. The City's current bus fleet consists of 32 fixed route and 16 para-transit for a total of 48. The City's solid waste fleet consists of 13 residential collection, 8 commercial collection, 4 roll-off, and 14 recycling for a total of 39.

For this study it was anticipated that the City will implement CNG in a phased approach as existing vehicles come to the end of there life cycle. For purposes of this study, it was assumed that solid waste vehicles have a life cycle of approximately 7 years and transit buses 12 years.

Based on capital expenditures required for installation of a CNG fueling station and procurement of CNG vehicles, it is anticipated that the City would start with the procurement of three CNG solid waste vehicles and three CNG transit buses. Additional vehicles and buses would be acquired as existing fleets reach their life cycle limits.

Police patrol vehicles would be another potential application for CNG fuel based on usage data and number of vehicles. It would be anticipated that police vehicles would be larger SUV type due to the space needed for onboard communications equipment and police gear, in addition to the CNG fueling system.

4.0 Potential Fueling Site Locations

Based on CNG vehicle types and available NG infrastructure and gas flow from Xcel Energy, two potential sites for a CNG fueling station have been identified. The two sites are Central Garage and the City Landfill.

4.1 Central Garage

The first site for consideration of location a CNG fueling station would be Central Garage because it currently serves as the City's primary vehicle fueling site and has adequate NG infrastructure in the area. In addition, Central Garage serves as the primary vehicle maintenance and storage facility for the City fleet. The site has added benefits such as access to sanitary sewer, paved surfaces and sufficient electrical capacity to power all the CNG equipment.

Based on information provided by Xcel Energy to Wenck, a 12-inch steel gas line runs along 23rd Street North from 7th Avenue North to the south. The 12-inch gas line has 60,000 cubic feet per hour of available gas flow at approximately 50 psig. Under these conditions, the City would be able to fill eight vehicles (40-gallon) per hour.

Xcel Energy indicated that if the City wanted additional NG, they could likely re-direct more flow to that area.

The proposed CNG equipment will require 400 amps at 480 volts of power. According to Xcel Energy, the existing power infrastructure in that area is large enough to handle the proposed load.

See Figure 1 for a conceptual layout of the CNG equipment and fueling station.

Pro's and Con's of this site location are summarized below.

Pros:

- Centrally located near existing gasoline/diesel fueling stations and vehicle maintenance garage
- Good existing infrastructure
- This location would allow utilization of Central Garage staff to maintain and operate the CNG fueling station

Cons:

- Limited space for future CNG fueling station expansion

4.2 City Landfill

A second location for a possible CNG fueling station would be the City landfill near the transfer station building. This location also has good infrastructure with access to water, sanitary sewer and a NG pipeline. This location would also allow the option of conversion of landfill gas to CNG. Since the NG pipeline is a high pressure transmission line, a substation would need to be constructed somewhere in the vicinity of the landfill.

The existing NG pipeline consists of a 6-inch steel transmission (200 psig) line along 45th Street from 7th Avenue North to 12th Avenue North. Based on information provided by Xcel Energy, the pipeline does not directly serve any customers at this time. As a result, Xcel Energy does not have a gas distribution (40 to 60 psig) line in this area. Therefore, Xcel would need to install a gas district regulator station to reduce the pipeline pressure. It would also require the installation of new distribution piping from the regulator station to the CNG fueling station. The existing 6-inch transmission pipeline should have sufficient capacity to serve the CNG fueling station.

The CNG fueling station will require 400 amps at 480 volts of power.

Figure 2 at the end of this report illustrates a conceptual layout of the CNG fueling station.

Pros and Cons of this site location are summarized below:

Pros:

- Convenient for refuse trucks and landfill vehicles
- Good existing infrastructure
- Adequate space for future CNG fueling station expansion
- Direct access to landfill gas for conversion to CNG

Cons:

- Added expense of building a gas district regulator station and distribution piping.
- Site is not convenient for fueling buses and other non-refuse vehicles.

4.3 CONVERSION of LFG to CNG

The City of Fargo currently owns and operates a Municipal Solid Waste (MSW) landfill located west of 45th Street between 7th Avenue North and 12th Avenue North. The landfill has an active gas collection system that is comprised of 62 vertical extraction wells, interconnecting piping, a blower system, and an enclosed flare. The system provides a withdrawl capacity of approximately 1,300 scfm of landfill gas (LFG).

The collection system supplies LFG to an off-site facility (Cargill) where it is used as a boiler fuel in lieu of natural gas. A portion of the LFG is also used to operate an on-site 925kw generator. The

generator produces electricity, which is sold to the local utility. Waste heat from the generator is used to heat the City's transfer station building.

The City is contractually obligated to provide Cargill with approximately 600 scfm of LFG and the generator consumes approximately 300 scfm of LFG. Thus, the committed allocation for CNG is approximately 900 scfm. The additional 400 scfm of available LFG could be used for conversion to CNG.

LFG consists of approximately 45-60% methane, 40-60% carbon dioxide, 2-5% nitrogen, 0-1% non-methane organics, and trace amounts of inorganic compounds. The 400 scfm of available LFG could produce approximately 2,000 gasoline gallon equivalents (GGE) of CNG.

Technology currently exists to clean LFG to pipeline NG quality. This requires removal of moisture, sulfides, siloxanes, oxygen, nitrogen, and other impurities. The cleaned LFG can be used alone or in combination with pipeline NG for use as CNG. If the conversion of LFG to CNG is the preferred option, it is likely that pipeline NG could be used as a backup fuel source. Since LFG contains approximately ½ the amount of methane as pipeline NG, there would be a loss in volume during the LFG cleaning process of approximately 50% (200 scfm of LFG would yield roughly 100 scfm of pipeline quality NG).

The proposed LFG cleaning system would require about 190 amps at 480 volts and would be sized to utilize 100 scfm of LFG which would produce approximately 500 GGE per day of CNG. The CNG equipment will require 400 amps at 480 volts of power. Xcel Energy has indicated that the existing power infrastructure in the landfill area is large enough to handle the proposed load.

If the City would move forward with the option of converting LFG to CNG, Wenck recommends that pipeline NG should be incorporated as a backup fuel source in the event that LFG would be unavailable or in limited amounts.

Figure 3 at the end of this report illustrates a conceptual layout of the LFG cleaning and CNG fueling station.

Pros and Cons of this site location are summarized below:

Pros:

- Convenient for refuse trucks and landfill vehicles
- Good existing infrastructure
- Adequate space for future CNG Fueling station expansion
- Utilization of existing LFG resource in leau of pipeline NG

Cons:

- Added expense of a gas district regulator station and distribution piping for pipeline NG backup

- Site is not convenient for fueling buses and other non-refuse vehicles
- Additional expense for LFG cleaning and conversion
-

5.0 Existing Building Modifications

Modifications will be required at facilities where CNG vehicles are stored and maintained due to building code requirements associated with CNG vehicles. The primary issue with buildings used for storage and maintenance of CNG vehicles is the potential release of NG from the vehicles.

5.1 Building Modifications

Wenck personnel performed a walk through inspection of Central Garage, Metro Area Transit Building, and the Solid Waste Utility Building to determine modification that would be needed if the City opted to utilize CNG vehicles. It is anticipated that the following modification will need to be performed:

- Ductwork modifications
- Gas unit heater modifications
- Light fixture modifications
- Installation of gas detection equipment
- Modification of HVAC system to allow for 100% outside air make-up
- Removal or modification of radiate heating system
- 2 – hour separation for maintenance areas

Major concerns with the storage and maintenance of CNG vehicles is elimating combustion sources in the upper level of the building (CNG is lighter than air) and a proper amount of air exchanges within the building.

6.0 Economics Evaluation

On May 28, 2014, the City was notified by the North Dakota Industrial Commission of approval of a bonding allocation under the State's Qualified Energy Conservation Bond (QECB) program. QECBs are interest free bonds that can be sold by project sponsors to finance "qualified" renewable energy projects. Projects related to the utilization of landfill gas (LFG) are considered qualified projects. The bonding allocation was in the amount of $2,875,000 for a City project to convert landfill gas (LFG) to compressed natural gas (CNG). As such, in the economic evaluations, the QECB allocation was able to be applied to potential options that involve the use of LFG.

As such, four options were evaluated for comparative purposes. The four options are listed below:

1. **Pipeline CNG Fueling Station at Central Garage – *Vehicle Fuel***
2. **Pipeline CNG Fueling Station at the Landfill – *Vehicle Fuel***
3. **LFG Conversion to CNG Fueling Station at the Landfill – *Vehicle Fuel***
4. **LFG Conversion to CNG at the Landfill – *Generator Fuel***

1. Pipeline CNG Fueling Station at Central Garage – *Vehicle Fuel*

This option would involve the installation of a new CNG fueling station at the Central Garage location. The fueling station would be connected to an existing Xcel Energy natural gas pipeline. This option included the following project components:

- CNG Fueling Station Equipment
- Central Garage Retrofit
- Transit Garage Retrofit*
- 11 Transit Buses
- 11 Solid Waste Trucks

*Transit garage can only perform maintenance on transit buses due to Federal Transit Administration (FTA) regulations

2. Pipeline CNG Fueling Station at the Landfill – *Vehicle Fuel*

This option would involve the installation of a new CNG fueling station at the Landfill location. The fueling station would be connected to an existing Xcel Energy natural gas pipeline. This option included the following project components:

- CNG Fueling Station Equipment
- Central Garage Retrofit
- Transit Garage Retrofit*
- 11 transit Buses
- 11 Solid Waste Trucks

*Transit garage can only perform maintenance on transit buses due to Federal Transit Administration (FTA) regulations

3.0 LFG Conversion to CNG Fueling Station at the Landfill – *Vehicle Fuel*

This option would involve the installation of new LFG conversion equipment and a CNG fueling station at the Landfill location. As a backup, the fueling station would be connected to an existing Xcel Energy natural gas pipeline. It also includes an upgrade of the existing LFG compressor station to improve the reliability of the LFG supply. This option included the following project components:

- LFG Conversion Equipment
- CNG Fueling Station Equipment
- Central Garage Retrofit
- Transit Garage Retrofit*
- LFG Compressor Station Upgrade
- 11 Transit Buses
- 11 Solid Waste Trucks

*Transit garage can only perform maintenance on transit buses due to Federal Transit Administration (FTA) regulations

3.0 LFG Conversion to CNG at the Landfill – *Generator Fuel*

This option would involve the installation of new LFG conversion equipment at the Landfill location. It also includes an upgrade of the existing LFG compressor station to improve the reliability of the LFG supply. This option included the following project components:

- LFG Conversion Equipment
- LFG Compressor Station Upgrade

Similar economic proforma evaluations were performed on the four options over a 25-year life cycle period. All project capital costs were annualized over 16-years for an equal annual capital repayment (similar to the Qualified Energy Conservation Bonds program). Results of the proforma evaluations for each option can be found in Appendix B. In an effort to ensure an equivalent comparison, each evaluation (except Option 4) included the acquisition of 11 CNG Transit buses and 11 CNG Solid Waste trucks. A basic summary of the evaluation results is shown on the following table.

Economic Evaluations

Option	Capital Cost Estimate	O&M Cost Estimate	Project Payback Period
1 – Pipeline CNG Central Garage	$4,234,000	$75,000/year	16 Years
2 – Pipeline CNG Landfill	$4,234,000	$75,000/year	16 Years
3 – LFG to CNG Landfill (Vehicles)	$6,284,000	$120,000/year	25 Years
4 – LFG to CNG Landfill (Generator)	$1,305,000	$40,000/year	1 Year

It is important to note that several assumptions were included in the economic evaluations as listed below:

- ***Inflation Rate*** — ***3%/year***
- ***Diesel Price*** — ***$3.73/gallon***
- ***Transit Diesel Usage*** — ***6,500 gallons/bus/year***
- ***Solid Waste Diesel Usage*** — ***3,700 gallons/truck/year***

7.0 RECOMMENDATIONS

Technical Feasibility

The technical evaluations performed in this study indicate that the use of CNG as a vehicle fuel is technically feasible for the City of Fargo. However, there are some unique challenges associated with each of the four options listed in Chapter 6. Those challenges include, but are not limited to, the following:

1. Interconnection with Xcel Energy natural gas pipeline (Xcel Energy requirements)
2. Reliability of Xcel Energy natural gas supply during high demand periods
3. Retrofit of Central Garage to store and maintain CNG vehicles (as described in Chapter 5)
   - Ductwork modifications
   - Gas unit heater modifications
   - Light fixture modifications
   - Gas detection equipment additions
   - HVAC modifications to allow for 100% air exchange
   - Radiate heating system removal
   - Maintenance area modifications to provide for 2-hour separation
4. Retrofit of Transit Garage to store and maintain CNG buses

(Similar, but not as extensive as Central Garage retrofit)

5. Training of Central Garage and Transit Garage maintenance staff
6. Training of Transit and Solid Waste operators (CNG fueling safety)

Economic Feasibility

The economic evaluations performed on the four options considered in this study indicate that the use of CNG as a vehicle fuel is "feasible" depending on funding availability and the City's comfort level with the calculated payback periods. Unfortunately, the City's QECB allocation of $2,875,000 can only be applied to project involving the use of LFG (Options 3 and 4). Therefore, Options 1 and 2 would require the City to provide 100% of the up-front financing for these options. The capital financing plan for each option is listed below:

1. Pipeline CNG Fueling Station at Central Garage – *Vehicle Fuel*

Total Project Estimate	**= $4,234,000**	
City Financed (100%)	= $4,234,000	City Debt Service = $266,760/year
QECB Financed (0%)	= Not Applicable	QECB Debt Service = Not Applicable

2. Pipeline CNG Fueling Station at the Landfill – *Vehicle Fuel*

Total Project Estimate	**= $4,234,000**	
City Financed (100%)	= $4,234,000	City Debt Service = $266,760/year
QECB Financed (0%)	= Not Applicable	QECB Debt Service = Not Applicable

3. LFG Conversion to CNG Fueling Station at the Landfill – *Vehicle Fuel*

Total Project Estimate	**= $6,284,000**	
City Financed (50%)	= $3,409,000	City Debt Service = $214,775/year
QECB Financed (50%)	= $2,875,000	QECB Debt Service = $180,000/year

4. LFG Conversion to CNG at the Landfill – *Generator Fuel*

Total Project Estimate	**= $1,305,000**	
City Financed (0%)	= Not Applicable	City Debt Service = Not Applicable
QECB Financed (100%)	= $1,280,000	QECB Debt Service = $80,640/year

Recommendations

Based on the economics of the four options and the need for retrofits of Central Garage and Metro Transit Garage for the storage and maintenance of CNG vehicles, it is recommended that the City take a phased approach to the utilization of CNG. Due to the QECB requirements related to landfill gas, it is recommended that the first phase be the implementation of Option 4 to convert LFG to CNG for use in the landfill generator. This would allow the entire project to be financed through the State's QECB allocation and limit the City's initial financial obligation. Once the LFG conversion project is operating successfully, a second phase could be considered to add a CNG fueling station, Central Garage retrofit and vehicle acquisitions.

It was recently discovered that the Federal Transit Administration (FTA) has grant funding available for CNG implementation and its related costs such as fueling stations, facilities retrofits and vehicle acquisitions. Therefore, based on discussions with staff members from Central Garage, Transit and Solid Waste, it was also recommended that a portion of the QECB allocation be used for a new contract employee for the purposes of grant writing in advance of the second phase of CNG implementation.

Appendix B

City of Fargo Landfill Gas Collection System

CITY OF FARGO LANDFILL GAS COLLECTION SYSTEM

GAS COLLECTION SYSTEM

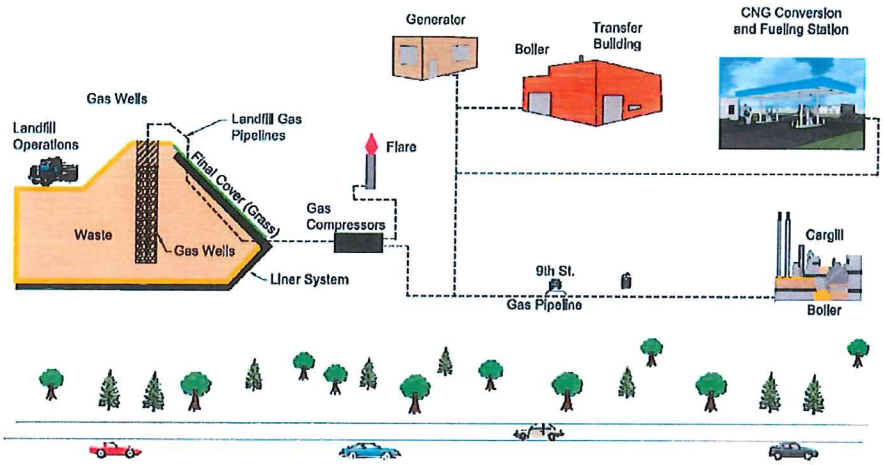

1. **Background with Cargill & Original Project Costs**
2. **Landfill Gas Projects & Costs (2001-2012)**
3. **Exhibit – Gas Collection System (2001 & 2012)**
4. **Production Projections – Current Landfill & East Landfill**
5. **Project Revenue to Date**

BACKGROUND- Landfill Gas Collection System

In 2001, the City began planning for the installation of an active gas collection system at the Fargo landfill for the purpose of controlling offensive odors that are commonly associated with the production of landfill gas. During the planning process, the City was contacted by Cargill expressing an interest in utilizing the gas at Cargill's seed processing facility at 250 7th Avenue North in West Fargo. Thus, Cargill and the City began negotiating an Agreement that described each party's responsibilities to construct a gas collection system at the landfill and gas delivery pipeline between the landfill and Cargill (Project). The Agreement was for a 20-year period and defined certain issues related to quantity, quality, and price of the landfill gas. Although the City is not aware of Cargill's exact level of investment in the original Project, the following provides a general description of each party's responsibility for construction of the original Project and associated costs:

City		Cargill	
Wellfield (20 wells)	$ 169,000	½ Forcemain	$ 500,000 (est.)
Wellfield Piping and ½ Forcemain	$ 457,375	Burner & Control System	$ 500,000 (est.)
Compressor Station	$ 390,895	**Total**	**$1,000,000 (est.)**
Total	**$ 1,018,170**		

The Project was completed in June 2002 and the City began collecting and delivering landfill gas to Cargill at that time. By design, each well is expected to produce approximately 25-30 CFM (cubic feet/minute) at an agreed upon sales price of $1.00/MMBTU for the first 100,000 MMBTU's annually and then 0.50/MMBTU for the balance of the year. An MMBTU means million BTU (also known as a decatherm) and was calculated using the following formula:

MMBTU = (cubic feet of landfill gas) x (.45) x (900) / 1,000,000

The original Agreement called for a maximum requirement of 588 CFM of landfill gas to be delivered.

LANDFILL GAS PROJECTS & COST:

2001: Original system (20 wells, blower, flare, header & piping)
Cost: $1,018,170

2007: Compressor Station Upgrade, Well Field Expansion (9 wells)
LFG Generator & Accessories
Cost: $1,531,344 *CREBS Funded
*Clean Renewable Energy Bonds

2009: Well Field Expansion (12 wells) & Control Valve
Cost: $170,000

2010: Well Field Expansion (8 wells)
Cost: $190,000

2012: Well Field Expansion (15 wells) & Piping
Cost: $283,000
Gas Collection System 2001 & 2012 shown on next page.

Project Costs to Date: $3,192,514

All project costs shown above have been funded as Landfill Capital Improvement Projects within the Solid Waste Division Annual Budget.

CREBS funds were allocated to the SWD Annual Budget.

GAS COLLECTION SYSTEM – 2001

GAS COLLECTION SYSTEM – 2012

LEGEND

- EXISTING CELL BOUNDARY
- GAS HEADER
- GAS SUB-HEADER
- GAS FORCEMAIN
- 23 GAS WELL
- 63 GAS MONITORING WELL
- GAS WELL 200 INFLUENCE AREA

CITY OF FARGO – DIVISION OF SOLID WASTE	COPYRIGHT Wenck Wenck Associates, Inc. Environmental Engineers 3310 FIECHTNER DRIVE, SUITE 110 FARGO, ND 58103 (701) 297-9600	JULY 2012
GAS COLLECTION SYSTEM		EXHIBIT B

Production Projections:

LFG Projection models have shown potential gas production to last approximately 40 years from the date that the waste was placed in a lined cell and covered (see figure below). The current landfill began placing waste in cell in 1990 and will be full in approximately 2022. The reclaimed and reused east landfill will have an additional capacity of approximately 18 years.

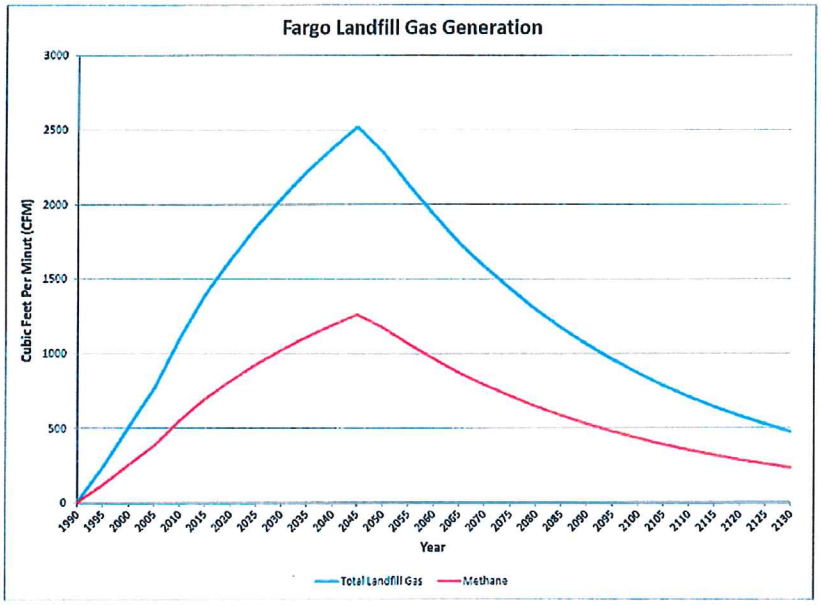

The ultimate well field layout of the current landfill is shown below. Currently there are 62 completed wells of which approximately 60 are productive. The layout below shows a potential total of 127 wells.

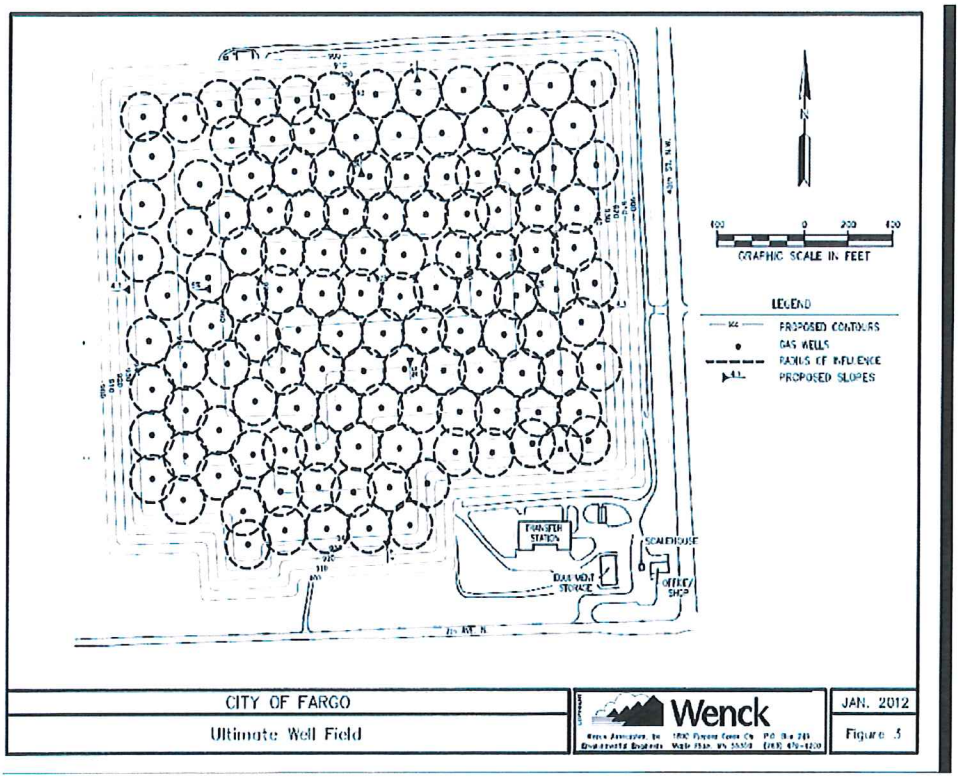

The ultimate well field layout of the east landfill is shown below. The layout shows a potential total of approximately 75 wells.

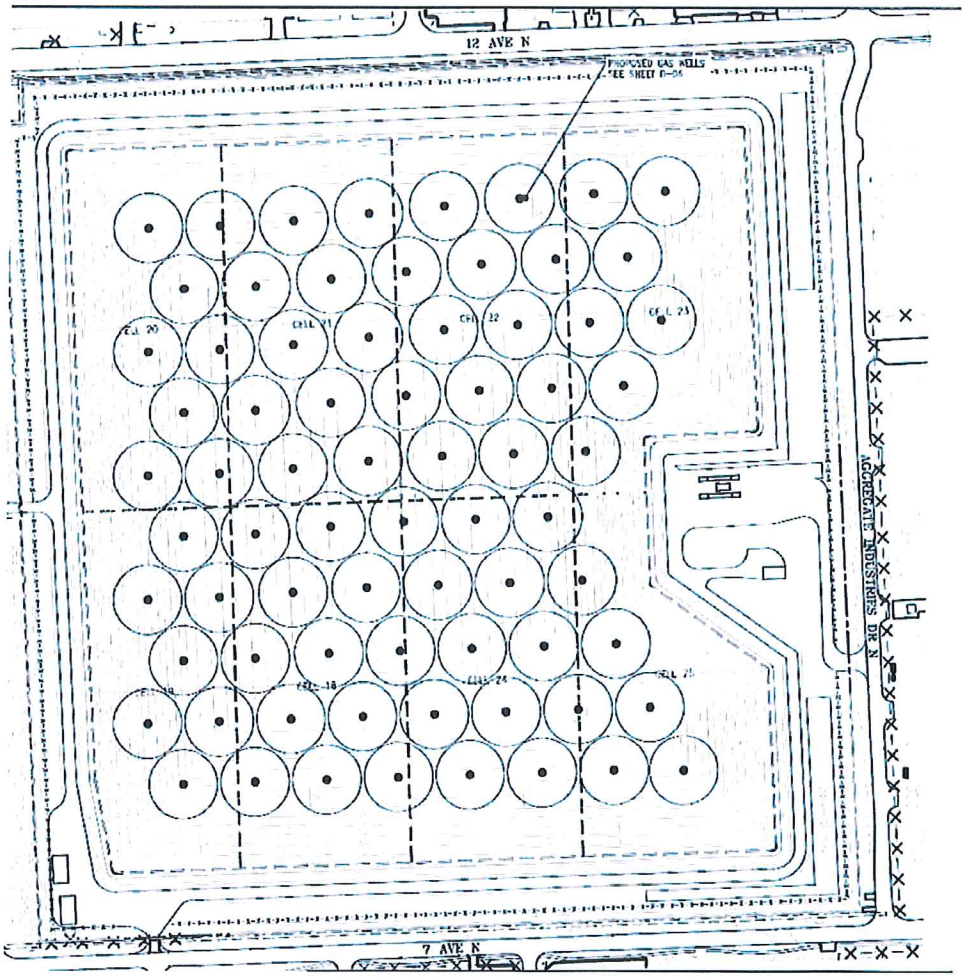

CITY OF Fargo

Cargill
Landfill Gas Usage

Month	Monthly Landfill Gas (SCF)	Monthly MMBTU	Cumulative MMBTU	Cost		
				1st 100,000 MMBTU	above 100,000 MMBTU	Monthly Total
June 02	9,647,637.00	3,907.29	3,907.29	$3,907.29	$0.00	**$3,907.29**
July 02	5,336,870.00	2,161.43	6,068.73	$2,161.43	$0.00	**$2,161.43**
August 02	6,858,620.00	2,777.74	8,846.47	$2,777.74	$0.00	**$2,777.74**
September 02	7,638,510.00	3,093.60	11,940.06	$3,093.60	$0.00	**$3,093.60**
October 02	10,939,000.00	4,430.30	16,370.36	$4,430.30	$0.00	**$4,430.30**
November 02	13,295,490.00	5,384.67	21,755.03	$5,384.67	$0.00	**$5,384.67**
December 02	15,127,750.00	6,126.74	27,881.77	$6,126.74	$0.00	**$6,126.74**
January 03	15,497,480.00	6,276.48	34,158.25	$6,276.48	$0.00	**$6,276.48**
February 03	13,724,220.00	5,558.31	39,716.56	$5,558.31	$0.00	**$5,558.31**
March 03	15,208,280.00	6,159.35	45,875.91	$6,159.35	$0.00	**$6,159.35**
April 03	13,098,460.00	5,304.88	51,180.79	$5,304.88	$0.00	**$5,304.88**
May 03	10,974,540.00	4,444.69	55,625.48	$4,444.69	$0.00	**$4,444.69**
Jun-03	6,162,760.00	2,495.92	2,495.92	$2,495.92	$0.00	**$2,495.92**
Jul-03	2,234,110.00	904.81	3,400.73	$904.81	$0.00	**$904.81**
Aug-03	5,288,230.00	2,141.73	5,542.47	$2,141.73	$0.00	**$2,141.73**
Sep-03	11,479,790.00	4,649.31	10,191.78	$4,649.31	$0.00	**$4,649.31**
Oct-03	14,103,760.00	5,712.02	15,903.80	$5,712.02	$0.00	**$5,712.02**
Nov-03	16,520,110.00	6,690.64	22,594.45	$6,690.64	$0.00	**$6,690.64**
Dec-03	16,626,050.00	6,733.55	29,328.00	$6,733.55	$0.00	**$6,733.55**
Jan-04	16,524,770.00	6,692.53	36,020.53	$6,692.53	$0.00	**$6,692.53**
Feb-04	16,224,040.00	6,570.74	42,591.27	$6,570.74	$0.00	**$6,570.74**
Mar-04	15,840,700.00	6,415.48	49,006.75	$6,415.48	$0.00	**$6,415.48**
Apr-04	15,990,310.00	6,476.08	55,482.83	$6,476.08	$0.00	**$6,476.08**
May-04	18,026,470.00	7,300.72	62,783.55	$7,300.72	$0.00	**$7,300.72**
Jun-04	13,662,480.00	5,533.30	5,533.30	$5,533.30	$0.00	**$5,533.30**
Jul-04	16,796,270.00	6,802.49	12,335.79	$6,802.49	$0.00	**$6,802.49**
Aug-04	12,197,540.00	4,940.00	17,275.80	$4,940.00	$0.00	**$4,940.00**
Sep-04	10,715,700.00	4,339.86	21,615.66	$4,339.86	$0.00	**$4,339.86**
Oct-04	14,588,920.00	5,908.51	27,524.17	$5,908.51	$0.00	**$5,908.51**
Nov-04	14,820,990.00	6,002.50	33,526.67	$6,002.50	$0.00	**$6,002.50**
Dec-04	13,514,000.00	5,473.17	38,999.84	$5,473.17	$0.00	**$5,473.17**
Jan-05	16,544,730.00	6,700.62	45,700.46	$6,700.62	$0.00	**$6,700.62**
Feb-05	16,466,030.00	6,668.74	52,369.20	$6,668.74	$0.00	**$6,668.74**
Mar-05	16,642,020.00	6,740.02	59,109.22	$6,740.02	$0.00	**$6,740.02**
Apr-05	11,932,010.00	4,832.46	63,941.68	$4,832.46	$0.00	**$4,832.46**
May-05	16,420,940.00	6,650.48	70,592.16	$6,650.48	$0.00	**$6,650.48**
Jun-05	8,288,040.00	3,356.66	3,356.66	$3,356.66	$0.00	**$3,356.66**
Jul-05	7,850,330.00	3,179.38	6,536.04	$3,179.38	$0.00	**$3,179.38**
Aug-05	6,302,230.00	2,552.40	9,088.44	$2,552.40	$0.00	**$2,552.40**

Month	Monthly Landfill Gas (SCF)	Monthly MMBTU	Cumulative MMBTU	Cost		
				1st 100,000 MMBTU	above 100,000 MMBTU	Monthly Total
Sep-05	16,893,850.00	6,842.01	15,930.45	$6,842.01	$0.00	**$6,842.01**
Oct-05	20,215,190.00	8,187.15	24,117.60	$8,187.15	$0.00	**$8,187.15**
Nov-05	20,613,340.00	8,348.40	32,466.01	$8,348.40	$0.00	**$8,348.40**
Dec-05	20,639,720.00	8,359.09	40,825.09	$8,359.09	$0.00	**$8,359.09**
Jan-06	23,029,890.00	9,327.11	50,152.20	$9,327.11	$0.00	**$9,327.11**
Feb-06	21,638,600.00	8,763.63	58,915.83	$8,763.63	$0.00	**$8,763.63**
Mar-06	24,282,250.00	9,834.31	68,750.14	$9,834.31	$0.00	**$9,834.31**
Apr-06	22,350,300.00	9,051.87	77,802.01	$9,051.87	$0.00	**$9,051.87**
May-06	24,054,280.00	9,741.98	87,544.00	$9,741.98	$0.00	**$9,741.98**
Jun-06	19,269,580.00	7,804.18	7,804.18	$7,804.18	$0.00	**$7,804.18**
Jul-06	22,714,670.00	9,199.44	17,003.62	$9,199.44	$0.00	**$9,199.44**
Aug-06	21,431,140.00	8,679.61	25,683.23	$8,679.61	$0.00	**$8,679.61**
Sep-06	23,522,729.00	9,526.71	35,209.94	$9,526.71	$0.00	**$9,526.71**
Oct-06	23,446,497.00	9,495.83	44,705.77	$9,495.83	$0.00	**$9,495.83**
Nov-06	22,611,692.00	9,157.74	53,863.50	$9,157.74	$0.00	**$9,157.74**
Dec-06	23,904,068.00	9,681.15	63,544.65	$9,681.15	$0.00	**$9,681.15**
Jan-07	24,609,559.00	9,966.87	73,511.52	$9,966.87	$0.00	**$9,966.87**
Feb-07	24,449,700.00	9,902.13	83,413.65	$9,902.13	$0.00	**$9,902.13**
Mar-07	29,112,055.00	11,790.38	95,204.03	$11,790.38	$0.00	**$11,790.38**
Apr-07	21,896,461.00	8,868.07	104,072.10	$4,795.97	$2,036.05	**$6,832.02**
May-07	19,328,498.00	7,828.04	111,900.14	$3,914.02	$0.00	**$3,914.02**
Jun-07	26,368,786.00	10,679.36	10,679.36	$10,679.36	$0.00	**$10,679.36**
Jul-07	20,895,351.00	8,462.62	19,141.98	$8,462.62	$0.00	**$8,462.62**
Aug-07	23,336,923.00	9,451.45	28,593.43	$9,451.45	$0.00	**$9,451.45**
Sep-07	19,981,983.00	8,092.70	36,686.13	$8,092.70	$0.00	**$8,092.70**
Oct-07	23,153,214.00	9,377.05	46,063.18	$9,377.05	$0.00	**$9,377.05**
Nov-07	20,251,743.00	8,201.96	54,265.14	$8,201.96	$0.00	**$8,201.96**
Dec-07	17,763,656.00	7,194.28	61,459.42	$7,194.28	$0.00	**$7,194.28**
Jan-08	19,813,079.00	8,024.30	69,483.72	$8,024.30	$0.00	**$8,024.30**
Feb-08	13,838,044.00	5,604.41	75,088.13	$5,604.41	$0.00	**$5,604.41**
Mar-08	16,716,516.00	6,770.19	81,858.31	$6,770.19	$0.00	**$6,770.19**
Apr-08	15,898,886.00	6,439.05	88,297.36	$6,439.05	$0.00	**$6,439.05**
May-08	19,859,270.00	8,043.00	96,340.37	$8,043.00	$0.00	**$8,043.00**
Jun-08	14,215,698.00	5,757.36	5,757.36	$5,757.36	$0.00	**$5,757.36**
Jul-08	18,451,383.00	7,472.81	13,230.17	$7,472.81	$0.00	**$7,472.81**
Aug-08	19,115,175.00	7,741.65	20,971.81	$7,741.65	$0.00	**$7,741.65**
Sep-08	13,129,455.00	5,317.43	26,289.24	$5,317.43	$0.00	**$5,317.43**
Oct-08	20,856,643.00	8,446.94	34,736.18	$8,446.94	$0.00	**$8,446.94**
Nov-08	24,073,067.00	9,749.59	44,485.78	$9,749.59	$0.00	**$9,749.59**
Dec-08	25,929,565.00	10,501.47	54,987.25	$10,501.47	$0.00	**$10,501.47**
Jan-09	28,087,337.00	11,375.37	66,362.62	$11,375.37	$0.00	**$11,375.37**
Feb-09	25,484,737.00	10,321.32	76,683.94	$10,321.32	$0.00	**$10,321.32**
Mar-09	28,119,182.00	11,388.27	88,072.21	$11,388.27	$0.00	**$11,388.27**
Apr-09	27,158,024.00	10,999.00	99,071.21	$10,999.00	$0.00	**$10,999.00**
May-09	20,466,281.00	8,288.84	107,360.05	$928.79	$3,680.03	**$4,608.82**
Jun-09	26,391,782.00	10,688.67	10,688.67	$10,688.67	$0.00	**$10,688.67**
Jul-09	20,033,784.00	8,113.68	18,802.35	$8,113.68	$0.00	**$8,113.68**
Aug-09	19,813,836.00	8,024.60	26,826.96	$8,024.60	$0.00	**$8,024.60**
Sep-09	18,904,833.00	7,656.46	34,483.42	$7,656.46	$0.00	**$7,656.46**

Month	Monthly Landfill Gas (SCF)	Monthly MMBTU	Cumulative MMBTU	Cost		
				1st 100,000 MMBTU	above 100,000 MMBTU	Monthly Total
Oct-09	13,184,707.00	5,339.81	39,823.22	$5,339.81	$0.00	**$5,339.81**
Nov-09	14,665,251.00	5,939.43	45,762.65	$5,939.43	$0.00	**$5,939.43**
Dec-09	23,093,606.00	9,352.91	55,115.56	$9,352.91	$0.00	**$9,352.91**
Jan-10	24,539,103.00	9,938.34	65,053.90	$9,938.34	$0.00	**$9,938.34**
Feb-10	22,372,553.00	9,060.88	74,114.78	$9,060.88	$0.00	**$9,060.88**
Mar-10	24,545,879.00	9,941.08	84,055.86	$9,941.08	$0.00	**$9,941.08**
Apr-10	24,017,144.00	9,726.94	93,782.80	$9,726.94	$0.00	**$9,726.94**
May-10	25,777,132.00	10,439.74	104,222.54	$6,217.20	$2,111.27	**$8,328.47**
Jun-10	23,561,407.00	9,542.37	9,542.37	$9,542.37	$0.00	**$9,542.37**
Jul-10	25,412,292.00	10,291.98	19,834.35	$10,291.98	$0.00	**$10,291.98**
Aug-10	17,530,617.00	7,099.90	26,934.25	$7,099.90	$0.00	**$7,099.90**
Sep-10	25,616,061.00	10,374.50	37,308.75	$10,374.50	$0.00	**$10,374.50**
Oct-10	26,089,448.00	10,566.23	47,874.98	$10,566.23	$0.00	**$10,566.23**
Nov-10	25,311,579.00	10,251.19	58,126.17	$10,251.19	$0.00	**$10,251.19**
Dec-10	29,968,785.00	12,137.36	70,263.53	$12,137.36	$0.00	**$12,137.36**
Jan-11	32,066,176.00	12,986.80	83,250.33	$12,986.80	$0.00	**$12,986.80**
Feb-11	24,298,919.00	9,841.06	93,091.39	$9,841.06	$0.00	**$9,841.06**
Mar-11	26,985,011.00	10,928.93	104,020.32	$6,908.61	$2,010.16	**$8,918.77**
Apr-11	27,245,595.00	11,034.47	115,054.79	$0.00	$5,517.23	**$5,517.23**
May-11	26,740,691.00	10,829.98	125,884.77	$0.00	$5,414.99	**$5,414.99**
Jun-11	21,445,293.00	8,685.34	8,685.34	$8,685.34	$0.00	**$8,685.34**
Jul-11	20,126,128.00	8,151.08	16,836.43	$8,151.08	$0.00	**$8,151.08**
Aug-11	23,656,933.00	9,581.06	26,417.48	$9,581.06	$0.00	**$9,581.06**
Sep-11	20,378,071.00	8,253.12	34,670.60	$8,253.12	$0.00	**$8,253.12**
Oct-11	27,591,754.00	11,174.66	45,845.26	$11,174.66	$0.00	**$11,174.66**
Nov-11	26,742,450.00	10,830.69	56,675.95	$10,830.69	$0.00	**$10,830.69**
Dec-11	29,235,237.00	11,840.27	68,516.23	$11,840.27	$0.00	**$11,840.27**
Jan-12	28,379,154.00	11,493.56	80,009.78	$11,493.56	$0.00	**$11,493.56**
Feb-12	28,419,693.00	11,509.98	91,519.76	$11,509.98	$0.00	**$11,509.98**
Mar-12	28,160,975.00	11,405.19	102,924.95	$8,480.24	$1,462.48	**$9,942.72**
Apr-12	26,694,891.00	10,811.43	113,736.38	$0.00	$5,405.72	**$5,405.72**
May-12	27,319,726.00	11,064.49	124,800.87	$0.00	$5,532.24	**$5,532.24**
Jun-12	27,067,168.00	10,962.20	10,962.20	$10,962.20	$0.00	**$10,962.20**
Jul-12	27,972,162.00	11,328.73	22,290.93	$11,328.73	$0.00	**$11,328.73**
Aug-12	14,597,938.00	5,912.16	28,203.09	$5,912.16	$0.00	**$5,912.16**
Sep-12	31,758,406.00	12,862.15	41,065.25	$12,862.15	$0.00	**$12,862.15**
Oct-12	29,955,127.00	12,131.83	53,197.07	$12,131.83	$0.00	**$12,131.83**
Nov-12	32,153,550.00	13,022.19	66,219.26	$13,022.19	$0.00	**$13,022.19**
Dec-12	36,978,494.00	14,976.29	81,195.55	$14,976.29	$0.00	**$14,976.29**
Jan-13	40,499,457.00	16,402.28	97,597.83	$16,402.28	$0.00	**$16,402.28**
Feb-13	27,339,427.00	11,072.47	108,670.30	$2,402.17	$4,335.15	**$6,737.32**
Mar-13	35,614,374.00	14,423.82	123,094.12	$0.00	$7,211.91	**$7,211.91**
Apr-13	37,145,588.00	15,043.96	138,138.08	$0.00	$7,521.98	**$7,521.98**
May-13	39,475,560.00	15,987.60	154,125.69	$0.00	$7,993.80	**$7,993.80**
Jun-13	35,674,794.00	14,448.29	14,448.29	$14,448.29	$0.00	**$14,448.29**
Jul-13	37,780,887.00	15,301.26	29,749.55	$15,301.26	$0.00	**$15,301.26**
Aug-13	8,271,655.00	3,350.02	33,099.57	$3,350.02	$0.00	**$3,350.02**
Sep-13	21,468,705.00	8,694.83	41,794.40	$8,694.83	$0.00	**$8,694.83**
Oct-13	35,849,252.00	14,518.95	56,313.34	$14,518.95	$0.00	**$14,518.95**

Month	Monthly Landfill Gas (SCF)	Monthly MMBTU	Cumulative MMBTU	Cost		
				1st 100,000 MMBTU	above 100,000 MMBTU	Monthly Total
Nov-13	34,196,634.00	13,849.64	70,162.98	$13,849.64	$0.00	**$13,849.64**
Dec-13	37,539,865.00	15,203.65	85,366.63	$15,203.65	$0.00	**$15,203.65**
Jan-14	36,756,804.00	14,886.51	100,253.13	$14,633.37	$126.57	**$14,759.94**
Feb-14	33,130,002.00	13,417.65	113,670.78	$0.00	$6,708.83	**$6,708.83**
Mar-14	36,094,109.00	14,618.11	128,288.90	$0.00	$7,309.06	**$7,309.06**
Apr-14	33,914,123.00	13,735.22	142,024.12	$0.00	$6,867.61	**$6,867.61**
May-14	35,394,430.00	14,334.74	156,358.86	$0.00	$7,167.37	**$7,167.37**
Jun-14	22,012,764.00	8,915.17	8,915.17	$8,915.17	$0.00	**$8,915.17**
Jul-14	24,434,858.00	9,896.12	18,811.29	$9,896.12	$0.00	**$9,896.12**
Aug-14	29,713,779.00	12,034.08	30,845.37	$12,034.08	$0.00	**$12,034.08**
Sep-14	32,336,433.00	13,096.26	43,941.62	$13,096.26	$0.00	**$13,096.26**
Oct-14	6,954,521.00	2,816.58	46,758.20	$2,816.58	$0.00	**$2,816.58**
Nov-14	0.00	0.00	46,758.20	$0.00	$0.00	**$0.00**
Dec-14	401,339.00	162.54	46,920.75	$162.54	$0.00	**$162.54**
Jan-15	12,479,947.00	5,054.38	51,975.12	$5,054.38	$0.00	**$5,054.38**
Feb-15	624.00	0.25	51,975.38	$0.25	$0.00	**$0.25**
Mar-15	254.00	0.10	51,975.48	$0.10	$0.00	**$0.10**
Apr-15	0.00	0.00	51,975.48	$0.00	$0.00	**$0.00**
May-15	11,676,687.00	4,729.06	56,704.54	$4,729.06	$0.00	**$4,729.06**
Jun-15	28,613,939.00	11,588.65	11,588.65	$11,588.65	$0.00	**$11,588.65**
Jul-15	21,916,317.00	8,876.11	20,464.75	$8,876.11	$0.00	**$8,876.11**
Aug-15	19,928,062.00	8,070.87	28,535.62	$8,070.87	$0.00	**$8,070.87**
Sep-15	16,260,541.00	6,585.52	35,121.14	$6,585.52	$0.00	**$6,585.52**
Oct-15	25,134,460.00	10,179.46	45,300.59	$10,179.46	$0.00	**$10,179.46**
						$1,267,217.14

Conversion for MMBTU = cubic feet of landfill gas X .45 X 900 / 1,000,000.

Cargill Contact: Jo 282-1652
Customer #3530 - Description for billing:
Month/Methane gas purchased from the City
of Fargo Sanitary Landfill

Monthly Total **$10,179.46**
Monthly Remedy Charges

Total Billed **$10,179.46**

Electric Service Agreement
Cass County Electric Cooperative and Minnkota Power Cooperative

Billing Period	Billing Date	Monthly Renewable Energy (kWh)	Cumulative Renewable Energy(kWh)	Total Monthly Payment to City of Fgo	Cumulative Yearly Payment to City of Fgo
Oct '07 (9/20 to 10/19)	10/31	736,200	736,200	$31,066.75	$31,066.75
Nov '07 (10/20 to 11/19)	11/30	435,600	1,171,800	$19,091.75	$50,158.50
Dec '07 (11/20 to 12/19)	12/31	572,700	1,744,500	$24,588.00	$74,746.50
Jan '08 (12/20 to 1/19)	1/31	796,200	2,540,700	$33,528.00	$33,528.00
Feb '08 (1/20 to 2/19	3/3	489,000	3,029,700	$21,240.00	$54,768.00
Mar '08 (2/20 to 3/19)	4/4	566,986	3,596,686	$24,348.94	$79,116.94
Apr '08 (3/20 to 4/19)	5/6	358,541	3,955,227	$15,977.89	$95,094.83
May '08 4/20 to 5/19)	6/4	584,785	4,540,012	$24,861.40	$119,956.23
Jun '08 (5/20 to 6/19)	7/3	565,532	5,105,544	$24,082.53	$144,038.76
Jul '08 (6/20 to 7/19)	8/4	514,839	5,620,383	$22,060.06	$166,098.82
Aug '08 (7/20 to 8/19)	9/2	572,643	6,193,026	$24,426.47	$190,525.29
Sep '08 (8/20 to 9/19)	9/29	464,397	6,657,423	$20,079.13	$210,604.42
Oct '08 (9/20 to 10/19)	10/31	536,180	7,193,603	$22,931.20	$233,535.62
Nov '08 (10/20 to 11/19)	12/4	523,940	7,717,543	$22,469.90	$256,005.52
Dec '08 (11/20 to 12/19)	1/2	482,285	8,199,828	$20,761.40	$276,766.92
Jan '09 (12/20 to 1/19)	1/27	285,852	8,485,680	$12,895.33	$12,895.33
Feb '09 (1/20 to 2/19)	3/3	543,550	9,029,230	$23,191.00	$36,086.33
Mar '09 (2/20 to 3/19)	4/2	443,959	9,473,189	$19,219.61	$55,305.94
Apr '09 (3/20 to 4/19)	5/8	546,213	10,019,402	$30,049.93	$85,355.87
May '09 (4/20 to 5/19)	6/4	387,921	10,407,323	$21,834.10	$107,189.97
Jun '09 (5/20 to 6/19)	7/6	580,357	10,987,680	$31,943.99	$139,133.96
Jul '09 (6/20 to 7/19)	8/4	566,083	11,553,763	$31,201.61	$170,335.57
Aug '09 (7/20 to 8/19)	8/27	311,281	11,865,044	$17,824.50	$188,160.07
Sep '09 (8/20 to 9/19)	9/25	0	11,865,044	$0.00	$188,160.07
Oct '09 (9/20 to 10/19)	10/28	0	11,865,044	$5,295.50	$193,455.57
Nov '09 (10/20 to 11/19)	12/9	0	11,865,044	$1,400.00	$194,855.57
Dec '09 (11/20 to 12/19)	1/2	191,997	12,057,041	$11,479.84	$206,335.41
Jan '10 (12/20 to 1/19)	2/1	506,397	12,563,438	$27,985.84	$27,985.84
Feb '10 (2/20 to 2/19)	3/1	563,744	13,127,182	$30,996.56	$58,982.40
Mar '10 (2/20 to 3/19)	3/29	515,513	13,642,695	$28,464.43	$87,446.83
Apr '10 (3/20 to 4/19)	5/7	514,174	14,156,869	$28,394.14	$115,840.97
May '10 (4/20 to 5/19)	5/27	436,314	14,593,183	$24,306.49	$140,147.46
June '10 (5/20 to 6/19)	7/2	475,172	15,068,355	$26,346.53	$166,493.99
July '10 (6/20 to 7/19)	8/3	467,823	15,536,178	$25,960.71	$192,454.70
Aug '10 (7/20 to 8/19)	9/8	451,310	15,987,488	$25,093.78	$217,548.48
Sep '10 (8/20 to 9/19)	10/1	555,278	16,542,766	$30,552.10	$248,100.58
Oct '10 (9/20 to 10/19)	11/5	497,935	17,040,701	$27,541.59	$275,642.17
Nov '10 (10/20 to 11/19)	12/8	442,901	17,483,602	$24,652.30	$300,294.47
Dec '10 (11/20 to 12/19)	12/30	425,466	17,909,068	$23,736.97	$324,031.44
Jan '11 (12/20 to 1/19)	2/10	141,691	18,050,759	$8,838.78	$8,838.78
Feb '11 (1/20 to 2/19)	2/28	538,435	18,589,194	$26,667.84	$35,506.62
Mar '11 (2/20 to 3/19)	4/7	505,981	19,095,175	$27,964.00	$63,470.62
Apr '11 (3/20 to 4/19)	5/9	548,394	19,643,569	$30,190.69	$93,661.31
May '11 (4/20 to 5/19)	6/6	516,244	20,159,813	$28,502.81	$122,164.12
June '11 (5/20 to 6/19)	7/13	423,110	20,582,923	$23,613.28	$145,777.40
July '11 (6/20 to 7/19)	8/3	346,972	20,929,895	$19,161.03	$164,938.43

T:\SolidWaste\SolidWaste\SWExcel\MONTHLYREPORTS\MO 08 combined revenue.xls

Billing Period	Billing Date	Monthly Renewable Energy (kWh)	Cumulative Renewable Energy(kWh)	Total Monthly Payment to City of Fgo	Cumulative Yearly Payment to City of Fgo
Aug '11 (7/20 to 8/19)	9/1	453,188	21,383,083	$25,192.37	$190,130.80
Sept '11 (8/20 to 9/19)	10/4	435,342	21,818,425	$24,255.46	$214,386.26
Oct '11 (9/20 to 10/19)	11/1	393,579	22,212,004	$22,062.90	$236,449.16
Nov '11 (10/20 to 11/19/11)	12/7	482,335	22,694,339	$26,722.59	$263,171.75
Dec '11 (11/20 to 12/19)	1/3	390,547	23,084,886	$21,903.72	$285,075.47
Jan '12 (12/20 to 1/19)	2/9	516,785	23,601,671	$28,531.21	$28,531.21
Feb '12 (01/20 to 02/19)	2/29	378,295	23,979,966	$21,260.49	$49,791.70
Mar '12 (02/20 to 3/19)	4/5	319,464	24,299,430	$18,171.86	$67,963.56
Apr '12 (3/20 to 4/19)	5/2	524,574	24,824,004	$28,940.14	$96,903.70
May '12 (4/20 to 5/19)	6/4	474,028	25,298,032	$26,286.47	$123,190.17
June '12 (05/20 to 06/19)	7/3	412,557	25,710,589	$23,059.24	$146,249.41
July '12 (06/20 to 7/19)	8/3	355,726	26,066,315	$20,075.62	$166,325.03
Aug '12 (07/20 to 08/19)	8/31	12,660	26,078,975	$2,064.65	$168,389.68
Sep '12 (08/20 to 09/19)	10/2	386,801	26,465,776	$21,707.05	$190,096.73
Oct '12 (09/20 to 10/19)	11/2	434,691	26,900,467	$24,221.28	$214,318.01
Nov '12 (10/20 to 11/19)	11/29	439,790	27,340,257	$24,488.98	$238,806.99
Dec '12 (11/20 to 12/19)	1/8	367,383	27,707,640	$20,687.61	$259,494.60
Jan '13 (12/20 to 1/19)	2/13	58,674	27,766,314	$4,480.39	$4,480.39
Feb '13 (01/20 to 02/19)	3/6	272,083	28,038,397	$15,684.36	$20,164.75
Mar '13 (02/20 to 03/19)	4/3	527,965	28,566,362	$29,118.16	$49,282.91
Apr' 13 (03/20 to 04/19)	5/16	547,545	29,113,907	$30,146.11	$79,429.02
May '13 (4/20 to 5/19)	6/25	451,091	29,564,998	$25,082.28	$104,511.30
Jun '13 (5/19 to 6/19)	6/25	567,975	30,132,973	$31,218.69	$135,729.99
Jul '13 (6/20 to 7/19)	8/12	266,829	30,399,802	$15,408.52	$151,138.51
Aug '13 (7/20 to 8/19)	9/11	506,972	30,906,774	$28,016.03	$179,154.54
Sept '13 (8/20 to 9/19)	10/7	301,670	31,208,444	$17,237.68	$196,392.22
Oct '13 (9/20 to 10/19)	11/1	439,279	31,647,723	$24,462.15	$220,854.37
Nov '13 (10/20 to 11/19)	12/12	473,863	32,121,586	$26,277.81	$247,132.18
Dec '13 (11/20 to 12/19)	1/2	541,815	32,663,401	$29,670.29	$276,802.47
Jan '14 (12/20 to 1/31)	2/13	683,487	33,346,888	$37,108.07	$37,108.07
Feb '14 (2/1 to 2/28)	3/12	489,317	33,836,205	$26,914.14	$64,022.21
Mar '14 (3/1 to 3/31)	4/9	261,608	34,097,813	$14,959.42	$78,981.63
Apr '14 (4/1 to 4/30)	5/14	478,589	34,576,402	$26,350.92	$105,332.55
May '14 (5/1 to 5/31)	6/4	537,828	35,114,230	$29,460.97	$134,793.52
June '14 (6/1 to 6/30)	7/16	444,650	35,558,880	$24,569.13	$159,362.65
July '14 (7/1 to 7/31)	8/11	364,898	35,923,778	$20,382.15	$179,744.80
Aug '14 (8/1 to 8/31)	9/11	420,776	36,344,554	$23,315.74	$203,060.54
Sept '14 (9/1 to 9/30)	10/15	98,311	36,442,865	$6,386.33	$209,446.87
Oct '14 (10/1 to 10/31)	11/12	288,043	36,730,908	$16,347.26	$225,794.13
Nov '14 (11/1 to 11/30)	12/10	141,440	36,872,348	$8,650.60	$234,444.73
Dec '14 (12/1 to 12/31)	1/12	25,684	36,898,032	$2,573.41	$237,018.14
Jan '15 (1/1 to 1/31)	2/10	500,629	37,398,661	$27,508.02	$27,508.02
Feb '15 (2/1 to 2/28)	3/9	498,579	37,897,240	$27,400.40	$54,908.42
Mar '15 (3/1 to 3/31)	4/9	274,295	38,171,535	$15,625.49	$70,533.91
Apr '15 (4/1 to 4/30)	5/18	448,144	38,619,679	$24,752.56	$95,286.47
May '15 (5/1 to 5/30)	6/16	535,548	39,155,227	$29,341.27	$124,627.74
Jun '15 (6/1 to 6/30)	7/2	447,581	39,602,808	$24,723.00	$149,350.74
Jul '15 (7/1 to 7/31)	8/11	107,958	39,710,766	$6,892.80	$156,243.54
Aug '15 (8/1 to 8/31)	9/8	185,612	39,896,378	$10,969.63	$167,213.17

T:\SolidWaste\SolidWaste\SWExcel\MONTHLYREPORTS\MO 08 combined revenue.xls

Billing Period	Billing Date	Monthly Renewable Energy (kWh)	Cumulative Renewable Energy(kWh)	Total Monthly Payment to City of Fgo	Cumulative Yearly Payment to City of Fgo
Sep '15 (9/1 to 9/30)	10/7	347,229	40,243,607	$19,454.52	$186,667.69
Oct '15 (10/1 to 10/31)	11/3	513,741	40,757,348	$28,196.40	$214,864.09
Grand Total		40,757,348		$2,155,135.04	
Reveune Account/Converted Electricity					
531-3074-385.10-30					

T:\SolidWaste\SolidWaste\SWExcel\MONTHLYREPORTS\MO 08 combined revenue.xls

Appendix C

Gas Leak Detection Methods

There are a variety of methods that can detect natural gas pipeline leaks, ranging from manual inspection using trained dogs to advanced satellite based hyperspectral imaging. The various methods can be classified into non-optical and optical methods. The primary non-optical methods include acoustic monitoring; gas sampling, soil monitoring, flow monitoring, and software based dynamic modeling.

Acoustic monitoring techniques typically utilize acoustic emission sensors to detect leaks based on changes in the background noise pattern. The advantages of the system include detection of the location of the leaks as well as non-interference with the operation of the pipelines. In addition, they are easily ported to various sizes of pipes.

Gas sampling methods typically use a flame ionization detector housed in a hand held or vehicle mounted probe to detect methane or ethane. The primary advantage of gas sampling methods is that they are very sensitive to very small concentrations of gases. Therefore, even very tiny leaks can be detected using gas sampling methods.

In soil monitoring methods, the pipeline is first inoculated with a small amount of tracer chemical. This tracer chemical will seep out of the pipe in the event of a leak. This is detected by dragging an instrument along the surface above the pipeline. The advantages of the method include very low false alarms, and high sensitivity.

Flow monitoring devices measure the rate of change of pressure or the mass flow at different sections of the pipeline. If the rate of change of pressure or the mass flow at two locations in the pipe differs significantly, it could indicate a potential leak. The major advantages of the system include the low cost of the system as well as non-interference with the operation of the pipeline. Software based dynamic modeling monitors various flow parameters at different

locations along the pipeline. These flow parameters are then included in a model to determine the presence of natural gas leaks in the pipeline. The major advantages of the system include its ability to monitor continuously, and non-interference with pipeline operations.

WENCK File #0208-133
April 2016

Preliminary Engineering Report Landfill Gas Compressor Upgrade And Landfill Gas Cleaning Equipment

Prepared for:

City of Fargo, ND

Division of Solid Waste
2301 8th Avenue North
Fargo, ND 58102

WENCK ASSOCIATES

Responsive partner.
Exceptional outcomes.

Prepared by:

WENCK Associates, Inc.
3303 Fiechtner Drive
Fargo, North Dakota 58103
Phone: 701-297-9600
Fax: 701-297-9600

Table of Contents

EXECUTIVE SUMMARY 1

1.0 INTRODUCTION 1-1

1.1 Project Understanding 1-1
1.2 Project Objectives 1-1

2.0 EXISTING SYSTEM EVALUATION 2-3

2.1 Introduction 2-3
2.2 Compression System 2-3
2.3 Electrical Control System 2-4
2.4 Building Enclosure 2-4
2.5 Electrical Switchgear 2-5
2.6 Remote Monitoring 2-5
2.7 Enclosed Flare 2-5
2.8 Existing Generator 2-5

3.0 DESIGN REQUIREMENTS 3-1

3.1 Introduction 3-1
3.2 Phase 1 3-2
3.3 Phase 2 3-3

4.0 PROPOSED POTENTIAL IMPROVEMENTS 4-1

4.1 Compression System 4-1
4.2 Gas Treatment 4-1
4.3 Building Enclosure 4-1
4.4 FLARE 4-1

5.0 PROCESS SYSTEM DESIGN 5-1

5.1 Introduction 5-1
5.2 Preliminary Flow Diagrams and System Layout 5-1
5.3 Compression System 5-4
5.3.1 Compression Equipment 5-4
5.4 Gas Treatment 5-6
5.4.1 H_2S Removal Equipment 5-6
5.4.2 Siloxane Removal Equipment 5-8
5.4.3 Additional cost to treat Cargill gas (H_2S and Siloxane treatment combined) 5-9
5.4.4 Future CNG/RNG 5-10
5.5 Building Enclosure 5-10
5.6 Electrical 5-11
5.7 PHASE 2 - CNG/RNG System 5-11

6.0 SITE DESCRIPTION AND CONDITIONS / SITE SERVICES 6-1

6.1 Introduction 6-1

6.2 Building Codes 6-2
6.3 Process Equipment 6-2
6.4 Electrical and Electronics 6-2
6.5 American National Standards Institute (ANSI): 6-2
6.6 The National Fire Protection Association (NFPA) 6-3
6.7 Other Applicable Codes 6-3

7.0 DESIGN CONSIDERATIONS AND APPROACH 7-1

7.1 Introduction 7-1
7.2 Electrical System Overview 7-1
7.3 Building Electrical 7-2

8.0 PROJECT SCHEDULE AND EXECUTION STRATEGY 8-1

8.1 Schedule and Execution Strategy - Phase 1 8-1

9.0 CONSTRUCTION COST ESTIMATE 9-2

9.1 Construction Cost Estimate 9-2

Table of Contents (Cont.)

In-Text TABLES

Figure 2-1: Existing System 2-3
Figure 3-1: Fargo Landfill Gas Generation 3-2
Figure 5-1: Option 1 - Landfill Gas Stream Treatment 5-2
Figure 5-2: Option 2 – Landfill Gas Stream Treatment 5-3
Figure 5-3: System Layout 5-4
Table 5-1: Compressors and Moisture Conditioning 5-5
Table 5-2: Capital vs. Operating Costs 5-7
Table 5-3: Capital vs. Operating Costs 5-8
Table 5-4: Siloxane Removal 5-9
Table 5-5: Willexa vs. Unison Removal Cost 5-10
Table 5-6: CNG/RNG Compression System 5-11
Table 5-7: CNG/RNG Compression & Fueling Station 5-11
Figure 6-1: Building Modifications and Exterior Equipment 6-1
Figure 8-1: Project Schedule 8-1
Table 9-1: Construction Cost Estimate/Phase 1/2 9-2

In Text FIGURES

Figure 2-1: Existing System 2-3
Figure 3-1: Fargo Landfill Gas Generation 3-2
Figure 5-1: Landfill Gas Stream Treatment 5-2
Figure 5-2: Cargill Gas H_2S Treatment 5-3
Figure 5-3: Future Expansion 5-4
Figure 6-1: Building Modifications and Exterior Equipment 6-1
Figure 8-1: Project Schedule 8-1

Appendices

Appendix A – Equipment Quotes – Phase 1
Appendix B – Equipment Quotes – Phase 2

Executive Summary

This report provides an evaluation of a phased approach to initially implement landfill gas treatment for future conversion to CNG fuel. The findings of an initial feasibility study (Wenck, December 2014) indicated that, although the use of landfill gas (LFG) conversion to CNG for City fleet fuel was technically feasible, the initial total project costs were prohibitive. Implementing a phased approach would not only enable to City to effectively utilize their Qualified Energy Conservation Bond in the amount of $2,875,000 they were allocated for renewable energy projects, but would also position it well to efficiently implement LFG to CNG conversion at a later time. This report evaluates the options, retrofits, equipment and costs necessary for the following phased approach:

1. **Phase 1**: Implementation of LFG treatment at the existing compression building for future conversion to CNG. The treatment methods required would be hydrogen sulfide (H_2S) removal, moisture removal, and Siloxane removal. The treated LFG would then be sent to the landfill's generator and boiler systems via the existing gas transmission pipe. This Phase also evaluated the equipment, building modifications, and costs to provide the same level of treatment for the portion of the existing gas flow that is currently sent to Cargill for use in their boiler system.
2. **Phase 2**: Further treatment of the gas at the landfill transfer building to remove CO^2, compress to CNG pressures for vehicle fuel and install a fueling station.

The existing landfill gas collection and treatment system was evaluated to determine what modifications would be needed at the existing compressor building including potential additions, electrical system upgrades and monitoring requirements. Design parameters for the system and equipment requirements were set based on anticipated future design flow requirements for the existing generator (300 scfm), existing transfer station boiler (100 scfm), future CNG (400 scfm) as well as required removal and treatment requirements. In order to develop comparative cost scenarios for building expansions, electrical requirements, and equipment placement, preliminary flow diagrams and system layouts were developed. Two options were evaluated:

1. **Option 1** would treat the entire gas flow prior to the compressors for H2S removal (2,000 scfm), moisture removal on the entire gas flow following the compressors, and siloxane removal on only the portion of gas flow to the generator and boiler and for future CNG (800 scfm).
2. **Option 2** would treat the Cargill gas stream (600 to 800 scfm) for moisture removal only (per current contract) and treat the remaining gas stream (800 scfm) for H2S and siloxane removal for the generator, boiler, and future CNG.

Equipment vendor costs were obtained for both of the above options As a result of the findings on the cost portion of the above options analysis Wenck recommends Option 2 that would reduce the initial capital and future operating costs for a future conversion of LFG to CNG. In addition to equipment vendor costs, building modification costs, piping, electrical, and monitoring costs were also evaluated to determine a preliminary cost estimate for total construction costs for Phase 1 of this project. The preliminary construction costs for Phase 1

are $2,474,000 with a total cost for both Phases of $5,988,000. A summary of the costs is included below:

Item	Description	Estimated Cost	Comments
	Phase 1		
1	Building modifications	$132,000	
2	Equipment Costs	$1,735,000	
3	Equipment Installation	$188,000	
4	Piping supply and Installation	$86,500	
5	Generator governor actuator	$33,600	
6	New electrical service	$25,000	
7	Overall electrical Installation	$135,000	
8	Final Engineering	$140,706	6% of construction
	Total Construction	$2,475,806	
	Contingency	$247,580	10% of construction
	Total Construction Cost Phase 1	**$2,723,386**	
	Estimated Phase 2 Costs	$3,514,300	
	Total Future Costs of Both Phases	**$6,237,686**	

It is recommended that the City of Fargo proceed with the Phase 1 portion of this project for the following reasons:

- The implementation of landfill gas treatment would reduce the maintenance expenses for the existing system
- The implementation of Phase 1 would enable the City to capitalize on the QECB to assist in funding the project.
- Portions of the existing system, ie. Flare, compressors, are at the end of the useful life and need to be replaced in the near future. This project would provide replacement opportunity as well as provide for additional treatment of the landfill gas making it more desirable for potential users.
- The initial implementation of landfill gas treatment would position the City well for future conversion to CNG fuel when the timing was optimal to do so.

1.0 Introduction

1.1 Project Understanding

The City of Fargo retained Wenck to complete a feasibility study (completed December 2014) to assist them with the potential incorporation of Compressed Natural Gas (CNG) as fuel for its transit buses and solid waste collection vehicles. The study also included the feasibility using landfill gas (LFG) converted to CNG.

Four options were evaluated in the feasibility study for comparative purposes as listed below:

1. **Pipeline CNG Fueling Station at Central Garage (Vehicle Fuel)**
2. **Pipeline CNG Fueling Station at the Landfill (Vehicle Fuel)**
3. **LFG Conversion to CNG Fueling Station at the Landfill (Vehicle Fuel)**
4. **LFG Conversion to CNG at the Landfill (Generator Fuel)**

The study revealed from a technical aspect the project would be feasible, however, the funding level required to complete the entire project was in excess of $5,000,000 and therefore it was decided to break the project up into phases. Previously, the City had been allocated $2,875,000 from the North Dakota Industrial Commission from a Qualified Energy Conservation Bond (QECB). QECB's are interest free bonds that can be sold by project sponsors to finance "qualified" renewable energy projects. Projects related to the utilization of LFG are considered qualified projects. Only options 3 and 4 above would qualify for the $2,875,000 QECB bonding allocation due to the use of LFG.

Based on the economics of the four options and the need for retrofits of the Central Garage and Metro Transit Garage for the storage and maintenance of CNG vehicles, it was recommended that the City take a phased approach to the utilization of CNG. Since the QECBrequire the use of landfill gas, it is recommended that Phase 1 be the implementation of treating the LFG at the blower building for future CNG including hydrogen sulfide (H_2S) and Siloxane removal. The treated LFG would then be sent to the landfill generator and boiler via the existing underground pipe.

Phase 2 would consist of tapping into the same pipeline near the transfer building, further treatment of the landfill gas to remove CO_2, compress to CNG pressures for vehicle fuel and install a fueling station. If the City intended to store and perform maintenance on CNG vehicles at this site there would also be a need to complete retrofits to the building where those operations would occur.

1.2 Project Objectives

This Engineering Design Basis Report evaluates an upgrade to the existing compression station (including controls) or a new system, LFG cleanup equipment to include; hydrogen sulfide removal equipment, a blower, and siloxane removal equipment and CNG equipment (compressor and fueling station), located at the City of Fargo Landfill.

In addition, the City also wanted to evaluate the capital and operation and maintenance costs for sending conditioned/treated (removal of H2S and siloxanes) landfill gas to Cargill.

The report will encompass overall conceptual design of Phase 1 as well as a phased approach as recommended in the CNG Feasibility Study. The phased approach would entail two phases, with the Phase 1 including:

- Upgrade to the existing compression system,
- Clean-up of approximately 800 cfm of landfill gas for H_2S and Siloxane removal to be sent to the onsite generator and boiler system.

The Phase 2 would include the installation of:

- Additional clean-up equipment for CO_2 removal
- CNG compression system
- CNG fueling station.

This document serves as a preliminary assessment of the options listed above. A final engineering document on one selected option should be performed prior to implementation.

2.0 Existing System Evaluation

2.1 Introduction

Wenck completed an evaluation of the existing landfill gas equipment. The landfill currently generates a total of about 1200 scfm of landfill gas. The gas is used as follows:

- approximately 600 - 800 scfm of landfill gas to Cargill for use as a boiler fuel
- approximately 300 scfm used in the onsite electrical generator
- and approximately 70 scfm used in the onsite boilers during cold weather.

The existing system is shown in the Figure 2-1 below.

Figure 2-1: Existing System

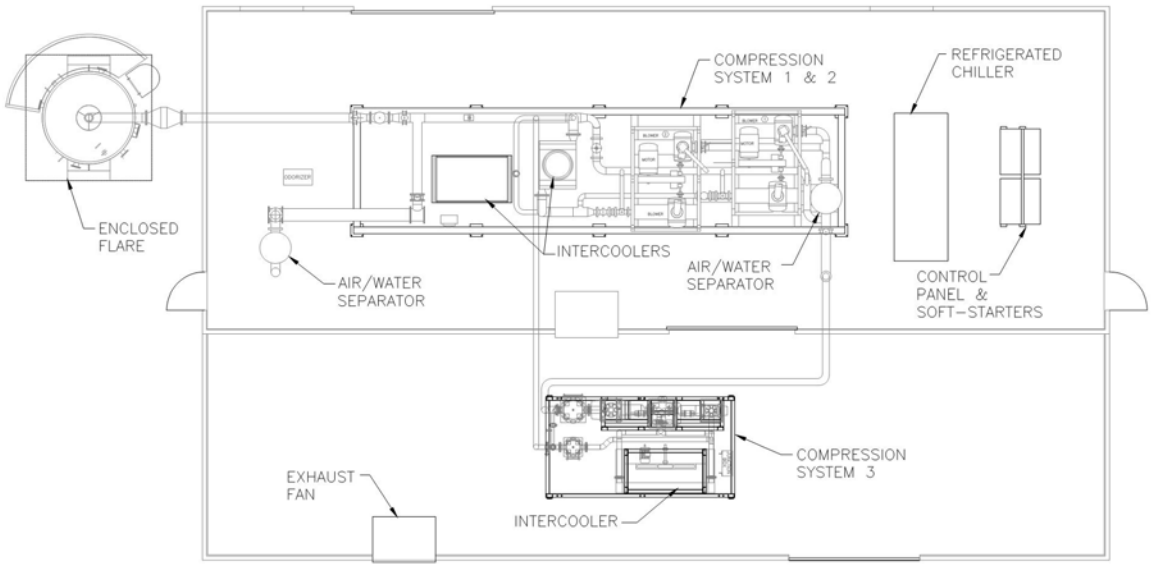

2.2 Compression System

The original landfill gas collection and compression system was installed in 2001 and was designed for 1,200 scfm (cubic feet per minute) gas flow rate at 20 psi discharge gas pressure. This design flow rate includes the compressors, air/water separators, intercoolers, the refrigerated chiller to remove moisture, and the enclosed flare system.

The original compression systems which have been in use for over 14 years, consists of

dual – two stage compression on one skid. The compression systems on this skid are referred to as compressor systems 1 & 2. The compressors are nearing the end of their design and operating life. Rebuilding the existing compressors is not recommendedas service parts are no longer available. Therefore a replacement of these compression units is recommended.

The existing number 3 compression system was installed in 2008 and is rated at 600 scfm, with a single – two stage compression system. This compressor is tied into the skid for compressors 1 & 2 prior to the aerial coolers and moisture removal system. This unit can be utilized in the redesign and will be part of the new system.

The original moisture removal system has required several chiller system repairs over the recent years. The current moisture removal system is also located in an area that does not allow for expansion to accommodate higher flow rates. Therefore a replacement of the existing moisture removal system is recommended.

2.3 Electrical Control System

The current electrical system is designed for 1,200 scfm and has a newer 600 scfm compressor backup that has to be manually started when needed.

The electrical control system for the Number 1 & 2 compression has limiting controls including no communication or interlocking between compressor skids, no intermittent control over the bypass valve, no ability of the flare to self-ignite, no supervisory control system, and no data acquisition capability.

The electrical control system for the number 3 compression system does not communicate with the existing system 1 & 2 and does not automatically start when part or all of system 1 & 2 goes down. Therefore a new electrical and control system is recommended.

2.4 Building Enclosure

The system was originally designed to be an outdoor facility with no building enclosure. After the initial operating of compressors 1 & 2 during cold weather, it was quickly apparent that a building needed to be built around the equipment to keep the system operational during freezing temperatures. The original building was constructed in 2002. When compressor 3 was added a building addition was also constructed. In order to have sufficient indoor height clearance and allow for a continued roof pitch, the floor on this building addition was constructed approximately 1-1/2 feet below the original floor height, which makes Foot traffic between the two buildings difficult and precludes the transfer of maintenance equipment between the two areas without going

around the outside of the building. The building experiences significant internal temperature swings through summer and winter, the building in not insulated and has minimal ventilation. The building does contain a ventilation fan to assist with cooling during the summer months. The building is not insulated and can get extremely cold in the winter months. The vent fans are also connected to a methane monitoring system that determines if a high level of methane is detected and the fans would be kicked on to ventilate the building. If the methane level reaches a second pre-set level a shunt trip breaker will isolate power to the building.

2.5 Electrical Switchgear

The electrical switch gear is located in the original building and is not isolated from the gas compression/generating equipment. Since the original installation was designed to be outside, there would have been no initial issues with electrical gear in close proximity to landfill gas collection and compression. The electrical switchgear needs to be isolated from the equipment area.

2.6 Remote Monitoring

The existing remote monitoring system is not functioning as intended. This system was to be used to track various operational items within the gas compression system such as operating pressures, gas flows, temperatures, and moisture levels, as well as operational status of the equipment.

2.7 Enclosed Flare

The existing flare is capable of handling up to 1,200 cfm. The flare system was originally set to self-ignite when conditions warranted a need for the flare. This feature has not been operational for some time and the flare does not automatically start when conditions warrant. Based on the age and capability of the flare a new flare is recommended that can handle higher flow rates and can also provide siloxane destruction.

2.8 Existing Generator

The existing generator is limited to operation within a methane variation range of 10%. Butler Caterpillar (CAT) has recommended a new governor actuator be installed that will allow the generator to run on almost any methane content. This feature gives more flexibility to running the generator at various gas qualities.

3.0 Design Requirements

3.1 Introduction

As a result of the evaluation of the existing system, it is recommended that a major portion of the existing equipment be replaced. The initial goal is to replace the existing 1,200 scfm compression system (compressors 1 & 2 and gas chilling equipment) that is past its useful life and provide a system that is reliable and expandable to account for future flow rates and CNG capability. Ultimately the system will need to be sized, or capable of being expanded to handle increasing landfill gas flows as more gas is generated and as the well field is expanded.

The system will be designed with the following parameters:

- Generator 260 scfm (H2S, moisture and siloxane treated)
- Boiler in transfer station 70 scfm (H2S, moisture and siloxane treated)
- Future CNG 400 scfm (H2S, moisture and siloxane treated)
- Cargill 600-800 scfm (moisture conditioned, (H2S and siloxane treatment not required at this time)
- Replacement of the existing 1200 scfm flare to a new flare with 2,000 scfm capability and siloxane destruction
- Replacement of compressors 1 and 2 for 1,400 scfm

As shown in Figure 3-1 it is estimated that the landfill will reach a maximum of ~2,600 cfm of landfill gas generation. The active gas collection system efficiency of recovering landfill gas varies with well field coverage, waste composition and the existence of a final cover system. The EPA's AP-42 identifies a range of 60-85% gas collection recovery from landfills, with 75% as "typical" for sites with comprehensive wellfields. Therefore future equipment design will be designed for a flow rate of up tp 2,000 scfm.

The existing #3 compressor is 7 years old, has 600 cfm capacity, and in good condition. At a minimum, replacement/upgrade of compressors 1 & 2 is needed to maintain current landfill gas odor control, based on the modeled landfill gas generation curve as shown in the figure above and to ensure the system stays operational with updated equipment that has parts available when needed.

Automatic switching of compressors, as well as repair of system monitoring, will be necessary to continue to control the LFG system and track trends.

Designing the replacement compressor skid for compressors 1&2, will require that two compression systems be included and controlled such that either one can be down for maintenance and allow #3 compressor to operate as the backup. In the future, as gas flow continues to increase, another compression system will be installed to achieve redundancy in the system.

Figure 3-1: Fargo Landfill Gas Generation

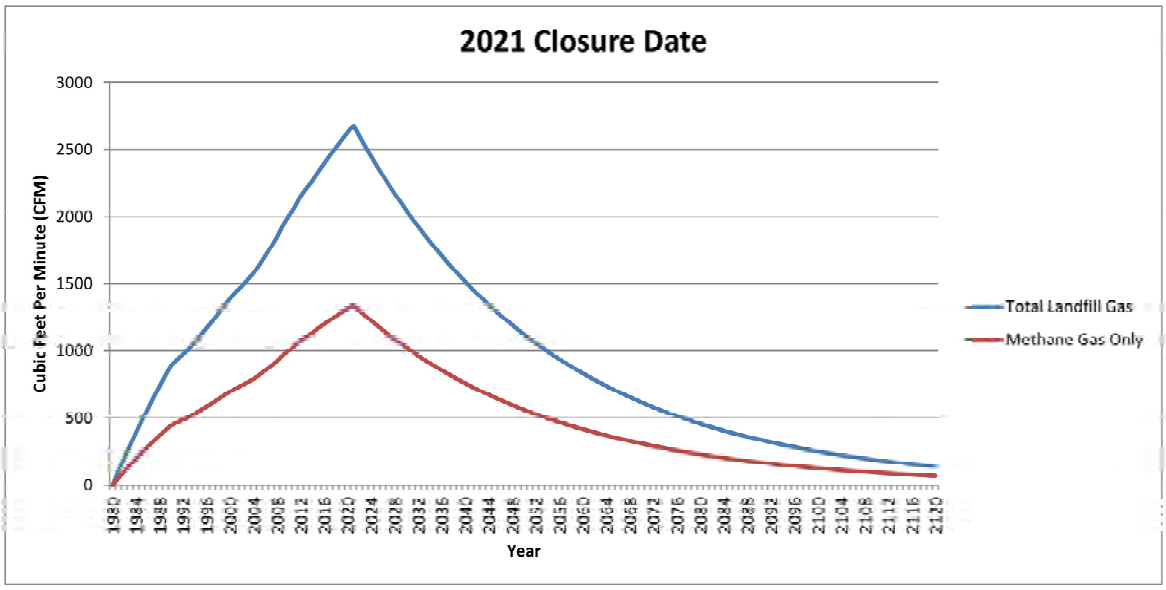

The system will be designed to have capability to remove the H_2S component of LFG as it shortens maintenance interval requirements on compressors and generators and would be necessary for CNG production. As a cost saving measure, the placement of the H2S unit will be prior to the compressors ., Placing the H2S removal unit on the high pressure side increases the costs..

Since we are recommending to follow the phased approach and adding future CNG compression, the electrical equipment will be isolated to meet National Fire Protection Agency (NFPA) guidelines designated as explosion proof. This will require providing a separate room for all electrical distribution panelboards and switch gear, and also require explosion proof motors, electrical enclosures, and wiring within the processing area. The building area will require modifications for insulation and proper ventilation to control temerperature swings during the various season.

3.2 Phase 1

The Phase 1 of the system will require upgrading/replacing the existing compression systems 1&2, replacing the flare, and clean-up of approximately 400 cfm of landfill gas to be sent to the onsite electrical generator and the boilers. This includes removal of moisture, H_2S and Siloxane.

Two options for proposed treatment systems for H2S and siloxanes are included in this report. The first option calls for the removal of H2S prior to any landfill gas compression system. This option would require the entire gas stream to be treated for H2S removal with siloxane removal completed only on gas for the generator, boilers, and future CNG equipment.

The second option would treat only the gas used onsite for H_2S and siloxane, which would requiretwo different compression systems each with its own moisture removal system and back up compression. Since the plan is to use the existing #3 compressor as a backup, two gas flows would increase capital costs but reduce annual operating costs.

Siloxane removal can be installed after Phase 1 compression. This allows the landfill compression system to have a separate treatment for gas going to the City of Fargo and Cargill without the same issues as above. The siloxane removal system uses a flare to burn off concentrated contaminates and requires natural gas or landfill gas to operate. The existing flare cannot be modified to handle the flow off of the siloxane removal system. Therefore a new flare will be designed for both existing landfill gas flows, and siloxane system effluent, as well as for future landfill gas flow.

The second option system would only treat landfill gas being used at the generator, boiler and future CNG equipment for H2S and siloxane removal. The H2S removal system needs to have saturated gas to work properly and has to be a low pressure (<15 psi). A system with a pressure higher than 15 psi falls under a different set of standards for the system design, thus significantly increasing capital costs. This option requires an additional blower to increase the pipeline pressure for gas being sent to Cargill. This option also allows for options of future gas usage and the level of treatment.

Options 1 and 2 are discussed in more detail in Section 4 and 5.

3.3 Phase 2

Phase 2 of the system would consist of further treatment of the LFG to produce gas that meets natural gas standards
that can then be compressed to CNG as a sustainable energy source.

4.0 Proposed Potential Improvements

4.1 Compression System

The long term design flow rate through the system is 2,000 scfm. It is recommended to incorporate the existing #3 compressor into an upgrade of compressor 1 & 2 system in a phased approach. Therefore, multiple compression systems that produce approximately 700 cfm each are recommended. Further, if the final system has four new compression systems at 700 cfm each (two in Phase 1, and two more as additional landill gas is available), then #3 compressor with 600 cfm capacity could act as the back up to all the new compressors.

Similar to the present system, heat generation from equipment will be used to heat the building in the winter and will be vented to atmosphere during times it is not needed.

As requested, all new equipment will be provided with capability to add SCADA system monitoring of the processing the future.

4.2 Gas Treatment

Two options for Hydrogen Sulfide (H_2S) removal are addressed in the following sections. The options consist of treating all landfill gas for removal of H2S or removal of H2S only from the gas that will be used onsite. Siloxane removal is anticipated to only occur for the gas that will be used onsite. The H_2S removal system needs to be located outside and the siloxane removal system can be installed either in a building or outside, currently both treatment units are planned to be installed outside.

4.3 Building Enclosure

The existing building has sufficient space to house the new Phase 1 compressors and new moisture removal system provided that compressor 3 is moved to allow room for the moisture removal equipment. A building addition will be necessary for the additional compression equipment once gas generation warrants the need. The H_2S system will require a large concrete pad to support the vessels and would be located along the east side the existing building. To minimize temperature extremes in the building, insulation of the interior walls and roof is recommended along with installation of a sheet metal interior. Additional ventilation will be installed for summer cooling as well as to take advantage of compressor heat for winter conditions. Note that excess heat will be discharged outside when heat for the building is not required.

4.4 FLARE

The existing flare cannot be upgraded or used in the future commissioning as the manufacturer is no longer in business. It cannot be modified to handle higher flows or the destruction of siloxanes as needed.

5.0 Process System Design

5.1 Introduction

The proposed system improvements include building modifications, equipment layout, equipment selection based on design components and cost information, as well as electrical site design improvements. Preliminary flow diagrams for system options and equipment layout provide information necessary for decisions on building layouts. In addition, the treatment equipment required for proper compression, moisture conditioning, and H2S and siloxane removal are all integral in developing the phased design approach desired by the City. The two phases that will complete the entire system include:

- Phase 1 – Convert landfill gas to CNG
- Phase 2 – Installation of the CNG compression and fueling system

5.2 Preliminary Flow Diagrams and System Layout

It is recommended that Phase 1 include a new compressor skid capable of handling 1,400 scfm and moisture control for 2,000 scfm. Therefore, the compressor skid would be designed for two new 700 scfm compression systems whereby one can be down for maintenance while the other is running, which takes advantage of the existing compressor #3 - 600 cfm compression system as a backup. Having 2,000 scfm moisture conditioning capacity allows for system flow increases over time as all three compressors could be used to get up to 2,000 scfm.

Two layout options for treating of the landfill gas for moisture, H2S, and siloxane removal have been evaluated. Option 1, as shown in Figure 5-1 would treat the entire gas stream prior to the compressors for H2S removal. Moisture removal would be provided after the compressors for the entire gas stream. Siloxane removal would be completed on the gas stream to be used for the generator (260 scfm), boiler (70 scfm), and future CNG equipment (400 scfm) for a total design flow of 800 scfm. See Option 1 - Landfill Gas Stream Treatment - Figure 5-1

Figure 5-1: Option 1 - Landfill Gas Stream Treatment

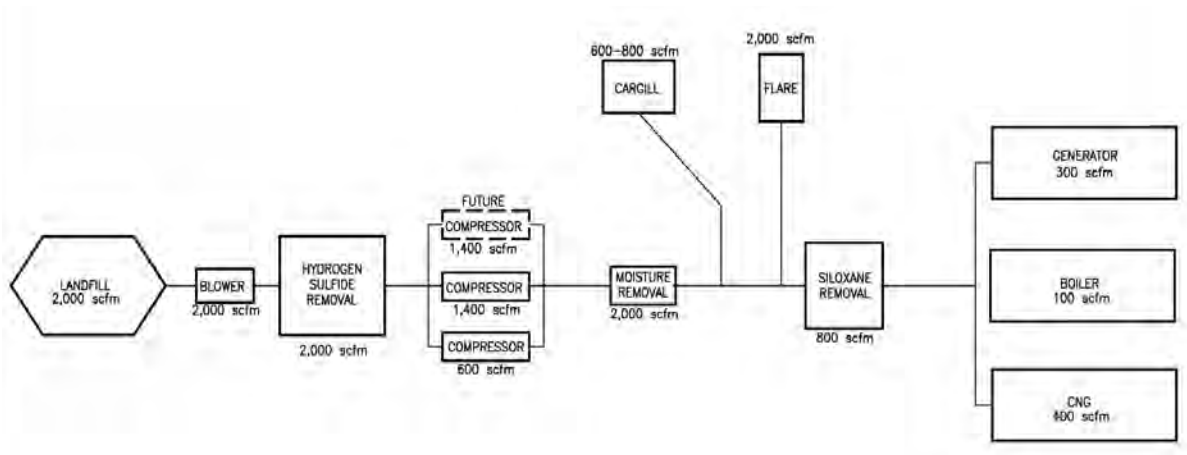

While Figure 5-1 shows all the landfill gas going through the H_2S removal system, there would be a bypass designed in the overall system to allow all the gas to be flared without treatment, should both Cargill and the City of Fargo not require landfill gas.

In Option 1 the H_2S removal system would be designed to handle the full expected landfill gas generation of 2,000 scfm, since the capital cost difference from designing for current flows of 1,200 scfm to 2,000 scfm are very minimal.

Option 2, as shown in Figure 5-2 would treat the Cargill gas stream for moisture removal only (per current contract requirements). Treatment for H2S and siloxane would be implemented on the remaining gas stream for the generator, boiler and future CNG equipment. The H2S removal system requires saturated gas to operate as intended and has to be at low pressure (<15 psi). A system with a pressure higher than 15 psi falls under a different set of standards for the system design, thus significantly increasing capital costs. An additional blower will be needed to increase the pipeline pressure for gas being sent to Cargill to meet the contract requirements for delivery pressure. Upgrades to Option 2 are also shown that would provide either or both H2S and siloxane removal on the gas flow to Cargill if they would require a higher quality gas.

Figure 5-2: Option 2 – Landfill Gas Stream Treatment

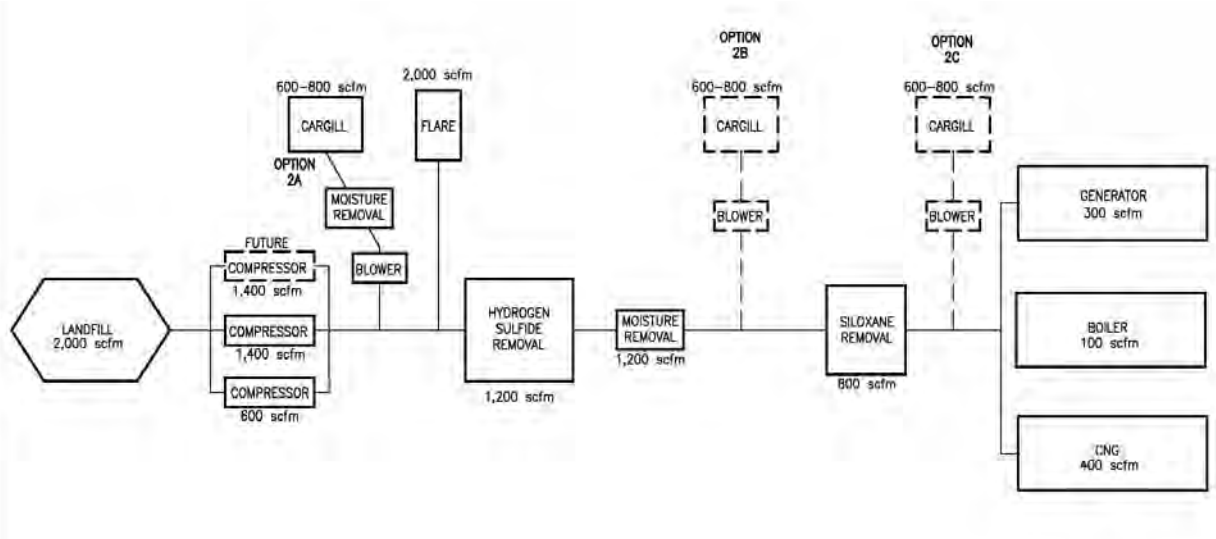

Option 2 would require the H2S removal system be designed for a flow rate of 1,200 scfm.

The siloxane removal systems would be sized for 800 scfm

For either Option 1 or 2 both the compressor skid and the moisture removal system would be installed in the existing building. The existing compressor skid with compressors 1 & 2 is obsolete and would be removed and replaced with the new 1,400 scfm skid. The new moisture removal system is physically larger than the old one and as such #3 compressor would be moved to the west to allow space for the new moisture removal system. The existing moisture removal system would be removed and discarded. Installation of the future compression system would require a building expansion that would house another 1,400 scfm skid and meet the future design flow rate of 2,000 scfm along with providing redundancy of the system. Wenck recommends that the City move forward with Option 2. This option allows options on future treatment of landfill gas as needs arise. See Figure 5-3 below.

Figure 5-3: System Layout

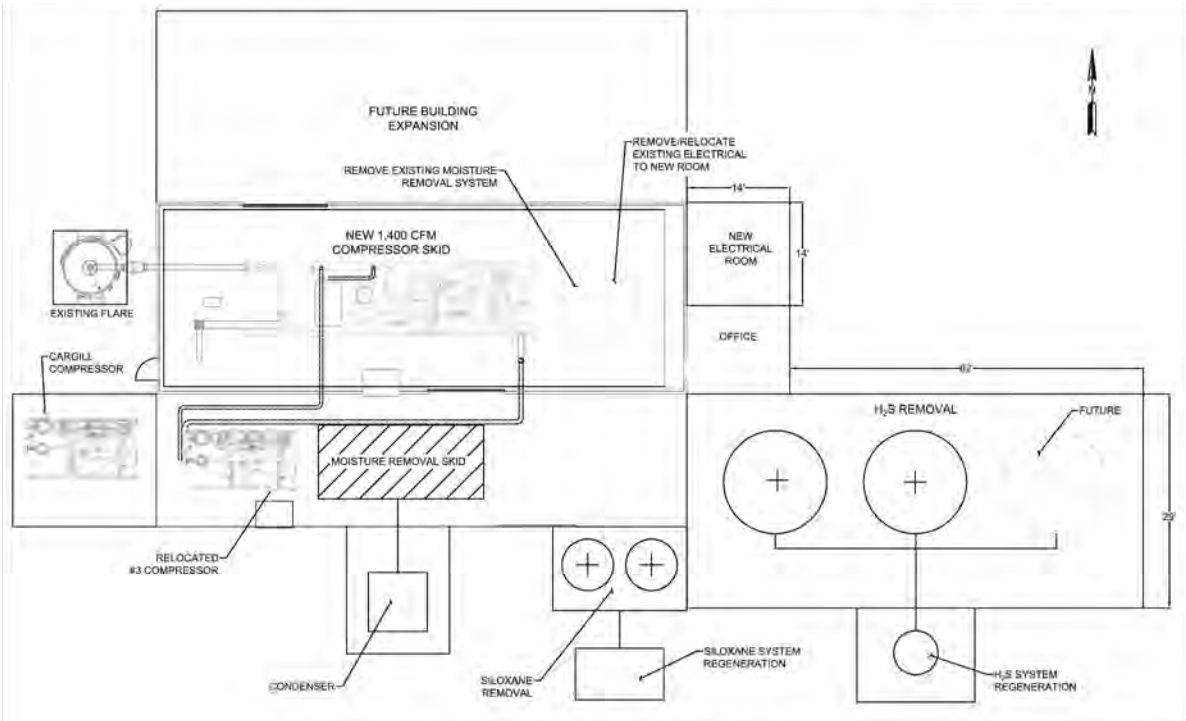

In order to utilize the existing building, to the highest extent possible, the following steps would be followed to stage this installation.

1) Build new electrical room and install new switch gear for Phase one upgrade, along with concrete pads for H_2S removal, Siloxane removal, and moisture removal condenser pad.
2) Build an office area to house record keeping material and provide a space for day to day operations.
2) Install new electrical feed from existing transformer to the new electrical room but do not make final connections to the transformer.
3) Relocate #3 compressor, install new moisture removal system, new H_2S removal system, and new Siloxane removal system.
4) Run conduit and wiring from new electrical room to new equipment listed above.
5) Replace compressor 1 & 2 with the new compression system, make final tie-in from existing transformer to the new electrical room, and wire all new equipment (8-10 weeks of downtime is expected for this changeover).

5.3 Compression System

5.3.1 Compression Equipment

Perennial Energy (PEI) custom builds compressor skids and has proposed one skid with dual compressor systems to handle the Phase 1 flow rate of 1,400 cfm. As required, this system can run 700 scfm or 1,400 scfm to allow maintenance and to also use the existing #3

compressor as a backup. Included in the compression system cost is the moisture removal system also rated at 1,400 scfm and is a total of $684,500. When one of the new compressors is not running and the existing #3 compressor is, the controls from PEI will adjust the compressor rpm, using a VFD to meet the demand loads.

Unison builds similar systems with the same moisture removal and variable speed controls. Their system at 1,400 cfm would be $750,000.

PEI has also provided costs for engine driven compressors, if the City of Fargo is so inclined to consider this option. Engine driven compressors would save about $200,000 in electrical operating costs over electric motor driven, and would give the City a more robust narrative on green energy initiatives. However, potentially there would be more maintenance required on engine driven compressors, and there is no option to run at 700 scfm as required to allow #3 compressor to be a backup.

The capital costs for both the electric motor driven compressor options and engine driven compressors at 1,400 and 2,800 scfm from PEI is shown in Table 5-1 below.

Table 5-1: Compressors and Moisture Conditioning

Flow Rate	Electric Motor Compression	Capital	Comments	Additional Comments
1,400	Unison	$750,000	Single Skid, two compressors	Heat recovery, gas intercooling, and moisture removal on a separate skid
1,400	PEI 2 stage dry compression	$648,500	One skid to hold two compression systems only	Heat recovery, gas intercooling, and moisture removal on separate skid
1,400	PEI Sliding Vane	$787,000	One skid to hold one compressor plus future compressor	Single Stage, oil injection
1,400	PEI Sliding Vane - Oil Injection	$777,000	One skid, plus room for future compressor, CAT engine, Leroi compressor	Using landfill gas, Further heat recovery available from engines
2,800	Unison	$1,500,000	Two Skids, two compressors each	Same as above
2,800	PEI 2 stage dry compression	$1,101,500	One complete skid, four compressors	Same as above
2,800	PEI Sliding Vane	$1,161,500	One complete skid, with two compressors	Single Stage, oil injection
2,800	PEI Sliding Vane - Oil Injection	$1,058,000	One complete skid, 2 Cat engines, 2 Leroi compressors	Using landfill gas, Further heat recovery available from engines
800	PEI Single Stage for Cargill	$176,500	One complete skid with a single compressor	Includes moisture removal

Due to the level of compression, from -55 inches of water to 10-20 psig, there are two options for compression. The two stage oil free system, currently installed, uses intercooling

coils to cool the first stage prior to compressing to final pressure. This is necessary to prevent overheating of the second stage. This option was proposed by both PEI and Unison. A total of Two compressors would be used to reach the maximum flow rate of 1,400 scfm. Again, these would be matched pairs where first and second stage compression is done with two compressors, so both would run as a tandem unit. The other option is to use an oil injection single stage sliding vane compressor that uses the oil injection for cooling. Because of the oil injection cooling, the above compression can be done with one larger compressor rather than two smaller ones. To reach 1,400 cfm, two of the oil injection machines would be used. The cost for sliding vane compressors over oil free is an additional 15% for the intended size range. The engine driven option above proposes these single stage oil injection/sliding vane compressors as well since it is more economical to have only one engine driving a larger machine. Note that oil separation on the discharge gas is needed on the sliding vane compressors.

All compressor skid proposals include air/water separators, heat exchange of cold outgoing gas with hot incoming gas to reduce this cooling load for maximum energy efficiency. Separate moisture removal skids are also included in each offering above using glycol chillers and heat exchangers to get to a 40 degree dew point.

If option 2 is the choosen option there would be a need to install an additional blower (800 scfm) and moisture removal system on the pipeline to Cargill. This blower would be needed to meet the delivery pressure required through the contract with Cargill. The cost of this blower is approximately $176,500.

Summary / Recommendation from Table 5-1

A compressor system that is capable of processing 1,400 scfm is recommended along with an additional compressor and moisture removal system for supply of gas to Cargill is the recommended option. The PEI, 2 stage dry compression along with the PEI single stage compressors cost approximately $861,000 ($684,500 plus $176,500).

5.4 Gas Treatment

5.4.1 H_2S Removal Equipment

Current landfill gas samples show over 1,200 ppm of H_2S in the landfill gas. The typical engine/generator sets (gensets) recommend less than 100 – 200 ppm of H_2S to minimize maintenance labor. The existing 1,200 ppm H_2S level may be a significant cause of the additional maintenance issues on the existing genset. In addition, future CNG production requires removal of Siloxane as well as H_2S.

As previously discussed, there are two options available for treatment of the landfill gas for H2S. Option 1 would allow for treatement of the entire gas stream (2,000 scfm) while Option 2 would allow for treatement of the gas being used in the generator, boiler and the future CNG equipment (800 scfm).

Willexa Energy, LLC (Willexa) has a regenerative filtering system that provides advantages on operating costs, as well as common landfill disposal of waste filtering media. A regenerative system works much the same way as a home water softener, but instead of using salt, it uses a small amount of soda ash dissolved in water. One vessel would be

cleaned while the next one is online. The solution of soda ash and water is recirculated through the vessel that is in a cleaning mode to regenerate the filter media and thereby clean and remove particulates. Once the cleaning phase is complete, that vessel is put back on-line and the next vessel that has filter buildup can be cleaned. The Willexa system is from MV Technologies, MV Technologies guarantees that their treatment equipment can achieve 15 ppm of H_2S. The cost for a 2,000 scfm system for Option 1 is $480,000. Because of the regenerative cleaning design, the frequency of media change is expected to be 6 months. Two to three vessels would be used allowing one vessel media to be cleaned or changed while the others are being used. Annual operating expenses are estimated to be approximately $150,000. A H2S system for Option 2, at a flow rate of 1,200 scfm is $424,000 with an annual operating cost of $369,700.

Unison Solutions, Inc. (Unison) has a filtering system for H_2S removal that has special waste handling needs and more frequent change of filter media. Unison has indicated that their treatment equipment can achieve 10 PPM of H_2S. The cost of a 2,000 cfm system is $1,200,000 with annual operating costs of $420,000. A system for Option 2 from Unison at 1,200 scfm is $850,000. Either way, the frequency of media change is every 2 months which adds a lot of labor to the equation. Unison uses seven vessels; so again, one can be changed while the others are being used.

Annual operating cost of media change for Unison Solutions with Option 2 would be approximately $210,000 for Unison.

BioClean H_2S removal system was also considered, but not recommended as the set up time is long, the effluent is highly acidic, and the capital and labor cost are prohibitive.

See Table 5-2 below for details and differences in capital and operating costs for Option 1.

Table 5-2: Capital vs. Operating Costs

Option 1 – Treatment of H2S Before Compression			
Flow Rate	**H2S Removal (1,200 ppm down to 100 ppm)**	**Capital**	**Yearly Operating**
800	MV Technologies H2SPlus - Regenerative	$350,000	$75,000
1,200	MV Technologies H2SPlus - Regenerative	$379,000	$136,000
2,000	MV Technologies H2SPlus - Regenerative	$480,000	$160,000
2,600	MV Technologies H2SPlus - Regenerative	$519,000	$204,000
1,200	Unison 1,200 cfm – 4 vessels	$850,000	$210,000
2,600	Unison 2,600 cfm – 7 vessels	$1,200,000	$420,000

Option 2 will require a H2S removal system that would be designed for a flow of 1,200 scfm. This option would require the installation of an additional compressor in order to provide the required discharge pressure to Cargill.

See Table 5-2 below for details and differences in capital and operating costs for Option 2.

Table 5-3: Capital vs. Operating Costs

Option 2 Treatment of H2S After Compression (Fargo Gas Only)			
Flow Rate	**H2S Removal (1,200 ppm down to 100 ppm)**	**Capital**	**Yearly Operating**
400	Willexa Dry System - 2 vessels	$299,000	$73,929
800	Willexa Dry System - 2 vessels	$299,000	$147,857
1,200	Willexa Dry System - 3 vessels	$424,000	$295,714
2,000	Willexa Dry System - 3 vessels	$424,000	$369,643
400	Unison Dry System - 2 vessels	$280,000	$63,000
800	Unison Dry System - 2 vessels	$280,000	$126,000
1,600	Unison Dry System - 4 vessels	$560,000	$252,000
2,000	Unison Dry System - 6 vessels	$840,000	$315,000

Summary / recommendation from Table 5-2 and 5-3 above:

Wenck recommends moving forward with Option 2 to reduce the capital and future operating costs. Therefore, a system that removes H2S should be sized for 1,200 scfm. This will allow for treatment of the gas for the generator, boiler and future CNG equipment. Unison 800 is $280,000 capital and yearly media cost of $126,000. The Unison equipment is modular and would allow for expansion of the system if the need arises.

5.4.2 Siloxane Removal Equipment

Current landfill gas samples show a concentration of approximately 2,315 ppm (26 mg/m3) of siloxanes in the landfill gas. In order to convert the landfill gas to CNG the siloxane level needs to be reduced to less than 5 ppm. Volatile organic compounds (VOCs) and non-methane organic compounds (NMOCs) are also reduced through the siloxane removal equipment. Willexa Energy has proposed a regenerative siloxane removal system that flares off the concentrated siloxane gas. It uses hot air to regenerate the media bed and requires media change about every 18 months. System capacity required is approximately 1,570 cfm so a 1,800 cfm system would be needed if all the gas going to Cargill, the existing genset, the existing boiler, and future CNG system was treated. The cost for that size from Willexa would be about $498,000, and the annual operating cost is about $17,000.

Unison has proposed modular systems at 400 cfm and 800 cfm. From there, they suggest matching multiple units to meet design flow rate requirements. The modular system costs are $110,000 and $150,000 respectively. The yearly operating cost for media change is approximately $43,000 and $130,000. To treat the required flow we would need two 800 cfm systems so $300,000 capital and $258,000 in yearly operating costs. Note that Unison

did indicate that for higher flow rates, they would recommended we go with the Willexa system as they are not competitive in this range due to high operating and labor costs.

Table 5-4: Siloxane Removal

Flow Rate	Siloxane Removal	Capital	Yearly Operating
400	Willexa - Regenerative - 2 vessel	$450,000	$5,000
800	Willexa - Regenerative - 2 vessel	$450,000	$10,000
1,200	Willexa - Regenerative - 2 vessel	$480,000	$14,000
2,000	Willexa - Regenerative - 2 vessel	$500,000	$17,000
400	Unison Filter Media - Activated Charcoal	$110,000	$600,000
800	Unison Filter Media - Activated Charcoal	$150,000	$840,000
1,600	Unison (2 - 800 cfm systems)	$300,000	$1,680,000
2,000	Unison (2 - 800 + 1 - 400)	$410,000	$2,280,000
2,000	Unison (Designed for 2,000 cfm)	$250,000	$2,520,000

Summary / recommendation from Table 5-4 above:

A siloxane removal system can be sized for 800 cfm assuming for the gas flow for the existing genset, boiler, and future CNG equipment was treated. Unison 800 is $150,000 capital and yearly media cost of $129,000. If siloxane removal is part of the Cargill gas supply, then the system would need to be sized for the 2,000 cfm system, the Willexa system would be about $500,000 and $17,000 operating, as opposed to Unison being $300,000 and 258,000 operating per year. If the City of Fargo decides to treat the Cargill gas, the Willexa system would make more sense on a financial and a reduced labor standpoint.

5.4.3 Additional cost to treat Cargill gas (H_2S and Siloxane treatment combined)

The H_2S system would theoretically go from 1,200 scfm to 2,000 scfm when conditioning LFG when conditioning LFG for Cargill in addition to original design flows.

The additional Siloxane flow would go from 800 scfm to 1,600 scfm when conditioning LFG for Cargill. If the Willexa Siloxane removal system is selected, the additional cost to remove Siloxane in the LFG going to Cargill is $40,000 in capital, and $6,000 in additional operating costs annually. If Unison is used for Siloxane removal, the additional would be $150,000 in capital and $129,000 in operating costs annually.

Table 5-5: Willexa vs. Unison Removal Cost

Cargill Gas Treatment	Additional Capital	Yearly Operating
Willexa	$0	$74,000
Unison	$280,000	$129,000

These cost represent the additional cost to the City of Fargo should the siloxane be treated and should be evaluated in future discussions on pricing with Cargill.

5.4.4 Future CNG/RNG

Pipeline grade CNG typically has tighter controls than Renewable Natural Gas (RNG) and needs to be monitored for compliance on a regular basis. This is due to CNG being introduced into a regulated pipeline where the energy industry has quality standards for commercial use. AlthoughRNG is similar in quality to CNG, it does not have to be monitored to the same level.

As stated previously, to produce quality grade CNG/RNG, H_2S and Siloxane have to be removed prior to high pressure compression, and the above proposed systems provide the majority of that removal.

Unison has provided proposals for modular CNG/RNG systems. They remove any remaining H_2S and Siloxane with carbon filters, and then also remove CO_2 with membrane technology. From there they compress the gas to pipeline pressures similar to natural gas.

The Unison 400 cfm system with compression, control panel, and winter enclosure is $1,332,800. The yearly operating cost is estimated to be $344,247 with media filter replacement as well as CO_2 membrane replacement needed every two months. Startup services are estimated to be $100,000. The system would be engineered to provide natural gas supply as a backup to the landfill gas. Industry standards show that the compression systems have limited downtime and typically don't see a redundant system installed.

5.5 Building Enclosure

Phase 1 of this project requires very little change for the existing compression building. The only building addition would be the new electrical room, and office. The new compressor would replace the existing compressor skid in the same location, the existing #3 compressor would be moved to the west to make room for the moisture removal system, and the H_2S removal and the siloxane removal systems would be installed outside. See Figure 5-2 above.

Currently it is anticipated the CNG/RNG equipment will not be located in this same building,.

5.6 Electrical

To meet NPFA guidelines for an enclosed gas compression system, a new electrical room needs to be built that is isolated from the process area. All electrical distribution, motor control switchgear, and electrical panel boards must either be installed in the room or be in explosion proof electrical enclosures. New equipment will be delivered with explosion proof motors and pre-wired to explosion proof electrical enclosures. New conduit and wire will need to be installed from the new electrical room to all equipment in the processing area.

5.7 PHASE 2 - CNG/RNG System

Modular compression systems for Phase 2, CNG/RNG have been proposed by Unison as listed below in Table 5-5.

Table 5-6: CNG/RNG Compression System

CFM	CNG/RNG	Capital	Yearly Operating	Maint. Frequency	Comments
200	Unison	$863,000	$212,714	2 months	1 -200
400	Unison	$1,332,800	$344,247	2 months	1 - 400
800	Unison	$2,760,000	$688,494	2 months	2 - 400's
1,200	Unison	$4,140,000	$1,032,741	2 months	3 - 400's

The recommended CNG/RNG size is 400 cfm and as such, the combined CNG/RNG compression and fueling station equipment costs are listed below:

Table 5-7: CNG/RNG Compression & Fueling Station

Description	Capital	Comments
Low Pressure Storage Tank	$155,000	Max. 250 psig
400 cfm CO_2 & Compression	$1,332,800	
Storage at Fueling Station	$450,000	3 Tank System
Fast Fill Fueling Station	$545,000	With Card Reader
Total Equipment	**$2,482,800**	
Site preparation	$100,000	
Startup Services	$80,000	Fueling Station
Compressor Startup	$100,000	
Total Site Prep & Start-up	**$280,000**	
Final Engineering (6%)	$165,800	
Total Construction	**$2,928,600**	
Contingency (20%)	$585,700	
Overall total CNG & Fueling	**$3,514,300**	

As you can see in Table 5-6 above, the equipment total for Phase 2 compression and fueling station combined is $2,482,800. The total start-up and site work is $280,000. The total for engineering is $165,800 for a Phase 2 toal of $2,928,600 before contingency.

6.0 Site Description and Conditions / Site Services

6.1 Introduction

Site shall be designed to comply with the current building codes. Additional information and discussions will be required to obtain information from The City of Fargo on site utilities, drainage and landscaping. See the aerial photo with building modifications and exterior equipment added below in Figure 6-1. The following summarizes our assumptions and areas to be reviewed:

Figure 6-1: Building Modifications and Exterior Equipment

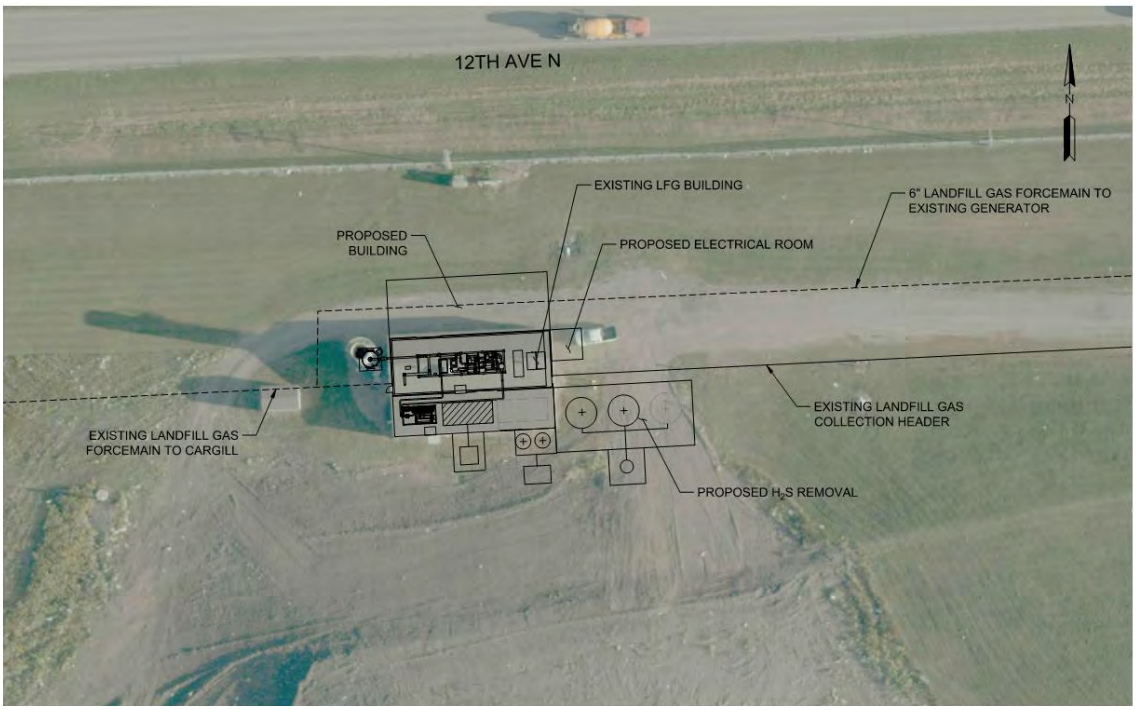

Site grade for proper drainage to be determined and subject to discussion with the City of Fargo.

Existing facility power is currently provided to the property by Cass County Electric. A service will be run from the existing transformer to the new electrical room and electrical distribution equipment. A step down transformation to 208/3/60 will be provided.

Fire Rating for compressor room shall be in accordance with IBC.

The existing gas monitoring system will be reused for this project. Future provisions for fire protection will be assessed at the time of future flow rate expansion. At that time it may be monitored by a future SCADA system, and include:

- Gas detection
- 20% LEL will start the building ventilation system
- 40% LEL will shut down the equipment
- Heat monitoring
- Fire extinguisher

6.2 Building Codes

To be designed in accordance with the most current building codes, standards and bylaws, including but not limited to:

International Building Code -2012	National Electrical Code - 2014
International Residential Code - 2012	Laws, Rules, and Wiring Standards of North Dakota - 2014
International Mechanical Code - 2012	International Energy Conservation Code - 2009
International Fuel Gas Code - 2012	International Property Maintenance Code - 2012
International Fire Code - 2012	NFPA #31 - 2006
North Dakota State Plumbing Code - 2009 (Uniform Plumbing Code - 2009)	

6.3 Process Equipment

ASME B31	ASME Boiler and Pressure Vessel Code

6.4 Electrical and Electronics

Electrical and electronics for Commercial & Industrial Design Standards. Shall include but is not limited to:

IEEE C57 for Transformers	

6.5 American National Standards Institute (ANSI):

ANSI C57.12.00 – Standard General Requirements for Liquid-Immersed Distribution, Power, and Regulating Transformers	ANSI C37.13 – Standard for Low Voltage AC Power Circuit Breakers Used in Enclosures
ANSI C 37.41 – Standard Design Tests for High Voltage Fuses, Distribution Enclosed Single-Pole Air Switches, Fuse Disconnecting Switches and Accessories	

6.6 The National Fire Protection Association (NFPA)

NFPA 70: National Electrical Code	NFPA 70B: Recommended Practice for Electrical Equipment Maintenance
NFPA 70E: Standard for Electrical Safety in the Workplace	NFPA 56: Standard for Fire and Explosion Prevention During Cleaning and Purging of Flammable Gas Piping Systems
NFPA 497: Recommended Practice for the Classification of Flammable Liquids, Gases, or Vapors and of Hazardous (Classified) Locations for Electrical Installations in Chemical Process Areas	NFPA 79: Electrical Standard for Industrial Machinery

6.7 Other Applicable Codes

International Standard for Electrical Installations of Buildings – IEC 60364	NEMA.- National Electrical Manufacturers Association

All electrical equipment shall be UL listed, UL508B for Control Panels
NEMA MG-1 Motors and Generators, Switchboards to NEMA PB-2, and UL-891, switchboards may include any combination of protective devices including insulated case, (ICCB), molded-case circuit breakers (MCCB) listed per UL-489, fusible switches listed per UL-508 and 977 and power circuit breakers listed to UL-1066.

7.0 Design Considerations and Approach

7.1 Introduction

Civil, Structural, Mechanical and Electrical Engineering, including drawings, plans, and specifications will be needed for the construction of the facility. This includes the related infrastructure and site services; site electrical supply, natural gas, electrical supply to the process equipment, lighting, and interconnection between the process equipment and new electrical room.

In addition, engineering is necessary for electrical area classification drawing(s); the new compressor building will generally be classified Class I, Division 2.

A programmable logic controller (PLC)/computer based control system shall be specified generally for the instrumentation, automation and control to provide continuous monitoring and control of the entire process to include gas flow rates, gas pressure, gas temperature, compression, process and equipment status at the facility. The short term system will be "architecture" level Allen-Bradley PLC s, or approved equal, which shall include a gateway capability for a variety of communication networks in order to accommodate an HMI (graphical "human machine interface") system for operator interface and control that will be interfaced to the City of Fargo. The HMI – to provide all typical functions of a traditional Supervisory Control and Data Acquisition system – will integrate data historian, trending analysis, reporting and of course, supervisory control of the field PLCs via a supervisory PLC. It is likely that the HMI SCADA system will be installed at a later date as well so that care will be taken to specify PLCs with minimum level of networking capability in all individual process equipment scopes of supply for all suppliers.

Logic diagrams and PLC/HMI programming and configuration shall be included for all automation and system control functions provided for the facility. Wenck will provide P&IDs, an Instrument List, and Control System Specification, schematics, Description of Operations and control panel assembly drawings for the equipment and construction tenders.

The above control system will take into account plans for future interface protocol to the City of Fargo's HMI-SCADA system, and to the Landfill Office HMI SCADA system.

7.2 Electrical System Overview

The landfill compressor facility processing loads will be connected to a 480V switchboard which will additionally distribute loads throughout the facility for lighting, HVAC and vendor equipment packages. The phase 1 Landfill Compressor Facility total load is anticipated to be approximately 290 KVA.

The existing service at 300KVA will accommodate the replacement of compressor skid 1 & 2 as well as the new equipment for phase 1 only. Upon approval to design the electrical engineering for phase 2, a new service size requirement will be evaluated and completed to accommodate additional compressor and future compressed natural gas and fuel station loads.

7.3 Building Electrical

Electrical designs for the buildings will conform to the latest editions of the National Electrical Code, 2014.

- A new 480/277 volt, three phase, four wire service entrance from Cass County Electric Cooperative (preferably underground) will be designed. A step down transformer will be provided at 120/208 volt, three phase, for lighting and HVAC.
- Branch panelboards and branch circuits will be provided for new convenience receptacles, miscellaneous mechanical and equipment connections, lighting, emergency/exit lighting and other site electrical. Motor control centers will be used for process loads (pumps etc.).
- Area Classification shall be Hazardous where required. Facility classification shall be provided by Wenck and conform to NFPA or PIP classification standards. Installation of equipment shall conform to the National Electrical Code, Article 500 Hazardous
- Existing gas detection instruments' with lower and upper percentage by volume of concentration of gas in gas-air mixture explosion limits will be tied into the new control system. These instruments will be set to start ventilation systems and to shut equipment down/send alarms at specific set points in the system.
- Services necessary during construction will include periodic site visits, review of shop drawings, review of contractor progress, commissioning and start-up of electrical systems and production of record drawings.
- Fugitive emissions study may be necessary.

8.0 Project Schedule and Execution Strategy

8.1 Schedule and Execution Strategy - Phase 1

After finial acceptance of the design basis memorandum, work on the equipment and building design will commence with the City's approval. Equipment design is expected to be completed first, at which time the request for proposal (RFP) would be sent out. Using an RFP approach, the vender bid packages will be better evaluated. With the equipment decided, final design of the building and HVAC equipment would be submitted as a construction bid request and follow in approximately 6 – 8 weeks. Construction could then start after another 4 to 5 weeks, weather permitting. A summary of the schedule would be as follows:

Figure 8-1: Project Schedule

Task	Duration
Prepare Request for Proposal for Equipment	30 days
Advertise for equipment	30 days
Select/Procure Equipment	45 days
Equipment shop drawings reviewed/approved	6 weeks
Building and delivery of equipment	26 weeks
Design of balance of plant	8 weeks
Prepare bid documents for general installation contractor	3 weeks
Award contract – Begin construction	4 weeks
Construction phase	8-12 weeks
Startup and training	2 weeks
Operations	

9.0 Construction Cost Estimate

9.1 Construction Cost Estimate

Construction cost estimates were made from a combination of quoted prices and experience. Table 9-1 below lists the items and associated costs for Phase 1/2. If actual equipment and construction cost for Phase 1 exceeds the QECB bond allocation the difference will be made up in the Solid Waste Capital Improvement expeditures.

Table 9-1: Construction Cost Estimate/Phase 1/2

Item	Description			Estimated Cost	Comments
	Phase 1				
1	Building modifications, new electrical room, insulate walls and ceiling, provide sheet metal interior			$132,000	Electrical room, insulation of building, outside concrete work
2	Equipment Costs			$1,735,000	New Flare included
	Bids on1,400 cfm PEI compressor, 800 PEI compressor, 1,300 cfm Willexa H_2S removal, 800 cfm Siloxane removal				
3	Equipment Installation			$188,000	
	Assembly, setting and anchoring skids				
4	Piping supply and Installation			$86,500	
5	Generator governor actuator			$33,600	
6	New electrical service			$25,000	
7	Overall electrical Installation			$135,000	
8	Final Engineering	6	percent	$140,706	
	Total Construction			$2,475,806	
	Contingency	10	percent	$247,580	
	Total Construction Cost Phase 1			**$2,723,386**	
	Estimated Phase 2 Costs			$3,514,300	
	Total Future Costs of Both Phases			**$6,237,686**	

Appendix A – Equipment Quotes – Phase 1

Rev 3 March 31st 2016
Rev 2 March 11th, 2016
Rev 1 March 4th, 2016
March 4th, 2016

Wenck Associates

Re: Fargo

Attn: Noel Kempfert

Noel,

Per your request, following and attached please find our **budgetary quotation** to supply the described products and services relative to your project requirements. We appreciate the opportunity to furnish this proposal.

Perennial Energy proposes to provide a unitized, modular, landfill gas conditioning system, with off-loading and installation by others. The conditioning system shall be sized per the specification to exert a **-55" WC vacuum** at the inlet of the skid (**-60" WC vacuum** at the inlet of the compressor) and deliver LFG to an integrated air-to-gas aftercooler. The LFG will then be processed through pre-cool, chill, and reheat heat exchangers where the gas will be chilled down to approximately 40 °F. It will then be processed through a knockout demister filter to remove an approximate **66.0 gph** (at 2600 SCFM) of condensate before it is reheated to approximately 90 °F. The final outlet condition of the LFG from this system shall be approximately **10.0 psig**, **90 °F, and 18% RH.** Discharge pressure control feature is accomplished with VFD compressor control. The three-phase, 480 VAC power panel and the single-phase load distribution panel are provided on the Perennial Energy system skid.

The Gas Conditioning System shall include four principal sub-systems:

- The Landfill Gas Compressor System (GCS)
- The Landfill Gas Dehydration System (DHS)
- The Landfill Gas Booster System (GCS)
- The MCC/Control Panel System (CP)

Not included in this proposal are the following:

- Site Civil, Electrical, or Structural Engineering
- Freight, off-loading, or Installation
- Bonds or liquidated damages
- Taxes, permits, fees, etc.
- Spare Parts

1375 County Road 8690 West Plains, MO 65775
Phone (417) 256-2002 Fax (417) 256-2801
www.PerennialEnergy.com sales@PerennialEnergy.com

The Landfill Gas Compressor System shall include:

- 10” system inlet isolation butterfly valve (SS disc & stem / viton elastomer)
- Landfill Vacuum transmitter and thermocouple on system inlet
- Vacuum and Temperature gauges provided on system inlet
- Stainless steel (304L) schedule 10 compressor inlet and outlet manifold piping.
- Schedule 10 304L weld hub assemblies w/ ANSI 125# powder coated ductile iron flanges
- Inlet demister/knockout. **304L SS construction** with polypropylene knitted mesh, multiple layer demister pad/filter rated for 100% removal efficiency at 6 micron droplet size. Removes free moisture in the incoming gas. Equipped with 8” flanged cleanout, differential pressure gauge, removable lid for element inspection and removal, and high level safety switch. **Sized for 1300 SCFM.** 5 psig vacuum/pressure rating. Demister is heat traced and insulated.
- Compressor suction side isolation butterfly valves (SS disc & stem / viton elastomer)
- Two (2) each Rotary lobe positive displacement compressor with cast iron housing and gear driven rotors, gas seals, and belt driven 125 HP TEFC inverter duty motor, 460 volt/60hz/3ph. The compressor will have a Corrgard internal coating, 304SS silencers. The compressor will take the pressure up to 13 psig, which will result in a temperature rise from 100 °F to 280 °F. **Each compressor package is sized for 650 SCFM. Two compressor packages will need to operate in parallel for 1300 SCFM capacity.**
- SS bellows expansion joints at compressor inlet and outlet connections
- Compressor discharge side isolation butterfly valves (SS disc & stem / viton elastomer)
- Compressor discharge side check valves (AL Body / AL disc & stem / viton elastomer)
- 1 each Gas-to-Air Aftercooler. This unit takes the heated gas and cools it to 120 °F using forced ambient air. **Stainless Steel Unit, 15** HP inverter duty fan motor. Sized for 1300 SCFM.
- Recirculation line to provide for dead head startup and surge control. Includes hand trim valve, electrically actuated modulating valve, and flex.
- 4 each Thermocouples with matching Temperature Indicators (System Inlet, Each Compressor Discharge, Aftercooler Discharge)
- 1 each Pressure Transmitter with matching Pressure Gauge, (Compressor discharge pressure)
- One each unitized structural skid to accommodate all above equipment in a fully integrated package.

- All devices fully installed, wired to skid mounted Explosion Proof (Nema 7) J-boxes, calibrated, and tested to the extent possible at the factory.

- All carbon steel surfaces sand blasted to SSPC SP-6 standards, primed and painted to Perennial Energy standard paint specs.

The Landfill Gas Dehydration System shall include:

- Precooler/Reheater Heat Exchanger. This tube-in-shell unit will receive the compressed LFG from the gas to air aftercooler, and pre-cool it using the 40 °F chilled LFG as the cooling medium. The LFG is pre-cooled from 120 °F to approximately 110 °F, preparing it for delivery to the chiller heat exchanger while the 40 °F chilled LFG is reheated to approximately 90 °F for delivery to the engines.

- 1 each Glycol/LFG Heat Exchanger. This tube-in-shell unit will receive the compressed LFG from the pre-cool heat exchanger and chill it to 40 °F using the 35 °F chilled glycol from the glycol chiller as the cooling medium. LFG wetted surfaces are 100 % 304L SS. This unit is insulated and jacketed. The exposed condensate piping is insulated and heat traced.

- Discharge demister/knockout. **304L SS construction** with polypropylene knitted mesh, multiple layer demister pad/filter rated for 100% removal efficiency at 6 micron droplet size. Removes free moisture in the incoming gas. Equipped with 8" flanged cleanout, differential pressure gauge, removable lid for element inspection and removal, and high level safety switch. 28 psig asme-code pressure rating. Knockout is heat traced and insulated.

- Commercial air cooled glycol chiller with R-410a refrigerant, redundant glycol delivery pump, low ambient controls, air cooled condenser, scroll compressors (Digital compressor on lead compressor), non-fused field disconnect, and sized for the specific project. De-rated for local ambient temperatures, 35 °F chilled glycol delivery, and 50% propylene glycol/water solution. Startup by factory trained Carrier technician included.

- 1 each estimated 300 Gallon insulated glycol thermal storage/reserve tank, strainer, manual valves, thermocouples, and gauges for glycol loop control will be provided. **50% propylene glycol solution shipped loose but installed by others.**

- 2 each Thermocouples with matching Temperature Indicators (Chilled Gas Temperature, System Discharge Temperature)

- 1 each Pressure Transmitter with matching Dwyer Capsuhelic Gauge, (System Discharge Pressure)

- Perennial Energy Tru-tube delivery flow meter to monitor flow to the flare. Veris annubar primary element with differential pressure transmitter, Pressure compensated, temperature compensated, specific gravity compensated. PLC calculates SCFM and totalizes flow.

- 1 each system discharge check valves (AL Body / AL disc & stem / viton elastomer)

- One each unitized structural skid(s) to accommodate all above equipment in a fully integrated package.

- All carbon steel surfaces sand blasted to SSPC SP-6 standards, primed and painted to Perennial Energy standard paint specs.

- All devices fully installed, wired to skid mounted Explosion Proof (Nema 7) J-boxes, calibrated, and tested to the extent possible at the factory.

The Landfill Gas Conditioning System MCC/Control Panel shall include:

- Nema 12/3R Power Distribution Panel w/main breaker and branch breakers to feed all system loads**.** 480 VAC Three Phase **1200 AMP** Main Breaker sized for future identical compressor system

- Nema 3R Rain/Sun Shield

- Control Panel Lighting

- Nema 12/R w/ NEMA 4 gasketing & 3 point locking handle controls/MCC enclosure with ventilation fan and heater for open loop cooling of components.

- 2 ea **125 HP** Heavy Duty Variable Frequency Drives for the LFG compressors. Controlled via PID loops to maintain system discharge pressure. 1 ea 15 **HP** Variable Frequency Drives for the aftercooler. Controlled via PID loops to maintain aftercooler discharge temperature.

- Allen Bradley PLC digital and analog logical supervisory control.

- Koyo C-more Touchscreen operator interface
  -All temperatures, pressures, flows, and other analog data displayed
  -All timers, setpoints, PID loops, and other system operator inputs available
  -Alarm and shutdown log

- Ethernet switch for remote connectivity to PLC & HMI

- Uninterruptable Power Supply for PLC, HMI, and communication devices

- OFF / ON switch for the System

- TEST / OFF / AUTO Switch for each Compressor

- TEST / OFF / AUTO Switch for the Aftercooler

- TEST / OFF / AUTO Switch for the Glycol Chiller

- System shutdown reset (ALARM RESET / LAMP TEST switch)

- Compressor run time indication (Touch Screen)

- Compressor high vibration annunciation (Touch Screen)

- Condensate high level annunciation (Touch Screen)

- Alarm and shutdown message annunciation (Touch Screen)

- AC and DC control voltage surge protection

- 15 kVA 480:240/120 single phase transformer
- Single-phase load distribution panel
- U.L. 508A Listed Control Panel
- Intrinsic Barriers for items located on the blower station in the Class 1 Div 1 Area
- Class 1 Division 1 wiring for the gas compression and dehydration skids. Wired to a local explosion proof junction box. Interconnection wiring supplied by others.

The Landfill Gas Booster System shall include:

- 10” system inlet isolation butterfly valve (SS disc & stem / viton elastomer)
- Landfill pressure transmitter and thermocouple on system inlet
- Vacuum and Temperature gauges provided on system inlet
- Stainless steel (304L) schedule 6 compressor inlet and outlet manifold piping.
- Schedule 10 304L weld hub assemblies w/ ANSI 125# powder coated ductile iron flanges
- Inlet demister/knockout. **304L SS construction** with polypropylene knitted mesh, multiple layer demister pad/filter rated for 100% removal efficiency at 6 micron droplet size. Removes free moisture in the incoming gas. Equipped with 8” flanged cleanout, differential pressure gauge, removable lid for element inspection and removal, and high level safety switch. **Sized for 1300 SCFM.** 5 psig vacuum/pressure rating. Demister is heat traced and insulated.
- Compressor suction side isolation butterfly valves (SS disc & stem / viton elastomer)
- One (1) each Rotary lobe positive displacement compressor with cast iron housing and gear driven rotors, gas seals, and belt driven 50 HP TEFC inverter duty motor, 460 volt/60hz/3ph. The compressor will have a Corrgard internal coating, 304SS silencers. The compressor will take the pressure from 10 psig to 24 psig, which will result in a temperature rise from 100 °F to 175 °F. **The compressor package is sized for 800 SCFM.**
- SS bellows expansion joints at compressor inlet and outlet connections
- Compressor discharge side isolation butterfly valves (SS disc & stem / viton elastomer)
- Compressor discharge side check valves (AL Body / AL disc & stem / viton elastomer)
- 1 each Gas-to-Air Aftercooler. This unit takes the heated gas and cools it to 120 °F using forced ambient air. **Stainless Steel Unit, 15** HP inverter duty fan motor. Sized for 800 SCFM.
- Recirculation line to provide for dead head startup and surge control. Includes hand trim valve, electrically actuated modulating valve, and flex.

- 3 each Thermocouples with matching Temperature Indicators (System Inlet, Each Compressor Discharge, Aftercooler Discharge)
- 1 each Pressure Transmitter with matching Pressure Gauge, (Compressor discharge pressure)
- Estimated discharge conditions are 800 SCFM, 23 psig, 120 °F, and 11% RH.
- One each unitized structural skid to accommodate all above equipment in a fully integrated package.
- All devices fully installed, wired to skid mounted Explosion Proof (Nema 7) J-boxes, calibrated, and tested to the extent possible at the factory.
- All carbon steel surfaces sand blasted to SSPC SP-6 standards, primed and painted to Perennial Energy standard paint specs.

General:

- System is priced on an **FOB Factory, West Plains, MO basis**. Freight can be pre-paid and added to invoicing.
- Two, 3 day on-site start-up & training trips by a factory field services technician/engineer are included.
- 3 copies of full engineering submittals are included.
- 3 copies of “as-built” Operation & Maintenance Manuals are included.

The system as described above and attached is provided as completely pre-packaged, pre-wired, and factory pre-tested as is possible. The system is offered **FOB Factory**, with freight billed at 115% of shipping invoice(s).

The pricing does not include any site civil or structural engineering, or site preparation work of any kind. Neither does the price include any local, state or federal taxes, or any permits, or tariffs of any kind. The system as quoted is to be off loaded, set in place, installed and interconnected by others. The system is designed for installation on equipment pad(s) installed at the same finished elevation. The system includes only the standard Perennial Energy warranty for 18 months from date of shipment or 12 months from date of first service, whichever occurs first. Please see copy of Perennial Energy warranty, attached. We are pleased to honor this quotation for 30 days from the date of this document. The pricing is dependent on receiving an approved order that would include industry standard commercial terms. Perennial Energy standard terms are:

10% with order
30% with approved submittals
55% upon shipment
05% upon successful start-up, unless failure to achieve successful start-up is neither the fault nor cause of Perennial Energy, then net 60 days of shipment

PRICING:

OPTION 1

- **1300 SCFM GCS with MCC/CP** system is offered for..... **$452,786.00**
- **1300 SCFM DHS** as described above is offered for..... **$195,672.00**
- Adder for Class 1 Div I Panel..... **$14,060.00**
- The **800 SCFM Booster Skid** (**120 °F, 23 psig Discharge**) **$176,466.00**

Total $838,984.00

OPTION 2

- The **2600 SCFM GCS with MCC/CP** system is offered for..... **$777,430.00**
- The **2600 SCFM DHS** as described above is offered for **$238.303.00**
- Adder for Class 1 Div I Panel..... **$14,060.00**
- The **800 SCFM Booster Skid** (**120 °F, 23 psig Discharge**) **$176,466.00**

Total $1,206,259.00

We anticipate that we could deliver the system in **20 - 24** weeks from receipt of approved submittals or other irrevocable release to order all materials. **Actual shipping estimates will have to be given at time of order**. We anticipate that submittals can be provided in **2-4** weeks from receipt of an approved order, with longest lead items submitted first.

Thank you for your consideration of Perennial Energy landfill gas products and services. Should you have any questions, or require further information in this regard, please do not hesitate to call.

Respectfully,

David Mathews

Perennial Energy, LLC
West Plains, MO 65775

Attachments / Enclosures:
Perennial Energy *Warranty / Service Policy and Conditions of Sale*

Willexa energy

Proposal: WEN 041416 H2S

14 April 2016

Attn: Noel R. Kempfert, Resource Group Manager – F&PE

Wenck Associates
1800 Pioneer Creek Center
Maple Plain, MN 55359

763.370.5823
nkempfert@wenck.com

Re: Revised Budgetary Proposal for an H_2S Reduction System for the City of Fargo LFGTE / CNG Project

Noel;

Please find included a revised budgetary proposal for an H_2S Reduction System for the City of Fargo LFGTE / CNG Project.

This proposal includes an MV Technologies H2S Reduction System including two insulated vessels of their Enhanced Iron Oxide Granular Media with a lead lag piping system, blend & byass and water sprayers. This system will include provision to allow expansion to a third vessel if needed at a later date. This equipment will provide reliable and cost effective H_2S treatment for up to 800 scfm of landfill gas (expandable to 2000 scfm).

This treatment system will provide less than 100 ppmv H_2S at the outlet when operated within the range of conditions outlined herein.

I will be in touch shortly to follow up. We look forward to working with you on this project.

Regards;

Brad Huxter
Exclusive Sales Agent
Willexa Energy, LLC
brad.huxter@willexaenergy.com

Your partner in biogas treatment

Willexa energy

Equipment • Media • Parts • Service

Budgetary Proposal

for an

H_2S Reduction System

for

Wenck Associates
City of Fargo LFGTE / CNG Project

14 April 2016

H_2S REDUCTION

Operating Conditions

This proposal includes an MV Technologies H2S Reduction System including two insulated vessels of their Enhanced Iron Oxide Granular Media with a lead lag piping system, blend & bypass and water sprayer. This system will include provision to allow expansion to a third vessel if needed at a later date. This equipment will provide reliable and cost effective H_2S treatment for up to 800 scfm of landfill gas (expandable to 2000 scfm).

This treatment system will provide less than 100 ppmv H_2S at the outlet when operated within the following range of *Operating Conditions*:

Operating Condition	Minimum	Maximum	Units
Inlet Gas Flow	-	800	scfm
Inlet Gas Vacuum	10	14	psig
Inlet H_2S Level	-	1240 (1)	ppmv
Ambient Temperatures	35 (2)	100	°F
Inlet Mositure Content	90	-	%RH

(1) Typical values only - to be adjusted as necessary prior to purchase depending on future gas analysis results.
(2) For ambient temperatures below 35°F, additional on site heat tracing and insulation (by others) may be required.

Features & Benefits

The H2S Reduction System as proposed will:

- Be designed to meet all operating conditions as determined by end-user requirements. MV Technologies will engineer and procure equipment necessary to deliver the H_2S outlet concentrations as required.
- Provide for easy and rapid media change out. A media change can typically be accomplished in less than 24 hours.
- Provide the lowest cost per pound of H_2S removal.
- Operate at 100% effectiveness immediately upon startup and does not require any off-line run-in or maturation period, as is standard in biological scrubbers.
- Not be susceptible to upset conditions such as large swings in H_2S concentrations or changes in temperature that have impact on biological scrubbers.
- Feature a "set and forget" design – Unless emission standards may demand more frequent sampling, typically operator attention is required only periodically (three times per week) to measure H_2S concentrations with industry standard Drager tubes (if instrument recording is not selected as a system option). We have many direct user testimonials that speak to the ease of operation of our systems – particularly in contrast to wet chemical or biological scrubbers.
- Be easy to install - In most all cases, because of the low pressure drop and simplicity of design, the units can be added to an existing gas delivery system with little ancillary modification.

Technology Overview

MV Technologies H2S Reduction System is a proven dry granular iron oxide scrubber system that effectively and efficiently removes hydrogen sulfide from gas streams.

The high-capacity media is comprised of a high porosity mixed iron-oxide tightly bound on a stable inert base. It is not adversely affected by water or hydrocarbon condensate, and its unique formulation allows reliable performance in air or gas with 95% or more relative humidity without need for added water. The media will not break down when soaked in water, and spent media can easily be removed from treatment vessels by a variety of simple methods.

This media provides high-capacity sulfur removal with a low and stable pressure drop. In addition to H2S, it als removes light mercaptans/COS with very little or no conversion to disulfides like other iron-based products, and it does so with or without O2 in the gas.

The media is water washed in place to increase sulfur removal.

Meets US and California requirements for non-hazardous disposal, without process contamination.

MV Technologies has applied this technology for odor and H2S removal for more than a decade across industry segments in a wide variety of applications; treating landfill gas and biogas from anaerobic digesters, wastewater treatment plants, lagoons and more. A Statement of Experience can be provided, and references are available upon request.

A key advantage to MV Technologies H2SPlus System is that it will meet your outlet concentration, regardless of seasonal variations / fluctuations of H2S inlet ppmv. An increase in H2S concentration only effects the rate at which the media is consumed.

Design & Operation

The H2S reductions System includes:

- two (2) x 14 psig pressure rated FRP vessels with inlet and outlet connections, top & bottom manways, and water sprayers. Water sprayers are manifolded together for single point conneciton, and include a valve to allow the introduction of water for bed saturation if needed to improve performance and maximize bed life.
- a lead lag piping system to allow vessels to be operated in parallel or in series with either vessel in the lead position, and the capability to bypass and blend gas to maintain the desired outlet quality, while maximizing media life. Blend and bypass valve may be operated manually, or automatically based on outlet H2S levels as an option on request. (It is not anticipated that blending will provide any sigificant benefit in this application.)
- blind flanges to facilitate addition of a third tower at a later date to provide treatment capacity up to 2000 scfm.

H2S inlet and outlet concentrations are either measured periodically with gas tubes, or optionally using flow and/ or H2S monitors and data recorders - available on request.

Media Replacement

Media does not fuse together, so it may be removed and refilled via vacuum truck through the top manway.

Parasitic Loads

Continuous operation of the H_2S Reduction System requires a presssurized water supply, and sufficient compression to overcome the total system pressure drop:

Item	Water	Pressure Drop
Requirements	< 40 gal / week	~ 44” WC

Investment

Item	Total
Two Vessel H2S Reduction System for 400 to 800 scfm	$299,000
Third Vessel for Future expansion to 1600 - 2000 scfm	$125,000

Pricing Terms

- Pricing is budgetary and subject to confirmation prior to order acceptance.
- All pricing is FOB Factory (domestic points of origin).
- Freight, taxes, site preparation, installation & assembly are not included.
- All pricing is NET 30 subject to a progress payment schedule as follows:
  - 25% due upon purchase order approval
  - 25% due upon approval drawing submittal
  - 25% due upon receipt of major components
  - 20% due upon shipment (or when ready to ship)
  - 5% due upon start-up (or 90 days after shipment, whichever occurs first)

Consumables

Estimated media replacement frequency and costs are as follows:

Inlet H2S concentration	1000 ppm
Estimated Replacement Frequency	140 days
Estimated Media Cost (Per Changeout)	$69,000

Warranty & Guarantees

Warranty is 18 months from date of shipment or 12 months from date of start up whichever occurs first. Further details on request.

Contact Information

For questions, further information, a formal or hard copy of this proposal, or to issue a purchase order for the equipment outlined above, please contact Brad Huxter at 704-560-8895, or brad.huxter@willexaenergy.com.

Willexa energy

Proposal: WEN 042716 SRS

27 April 2016

Attn: Noel R. Kempfert, Resource Group Manager – F&PE

Wenck Associates
1800 Pioneer Creek Center
Maple Plain, MN 55359

763.370.5823
nkempfert@wenck.com

Re: Budgetary Proposal for a 800 scfm SRS Siloxane Reduction System for the City of Fargo LFGTE / CNG Project

Noel;

Please find included a budgetary proposal for a Willexa Energy SRS Siloxane Reduction System for the City of Fargo LFGTE / CNG Project.

This proposal includes a regenerative siloxane reduction system with pre and after filtration, and an optional enclosed combustion flare. This equipment will provide reliable and cost effective siloxane treatment for up to 800 scfm of landfill gas used to fuel reciprocating engine driven generators and a CNG compressor.

This treatment system will eliminate all siloxane related build up, engine maintenance, downtime and loss of efficiency, as well as assisting in meeting the specifications for CNG gas quality with respect to total siloxanes.

Willexa Energy is the market leader in regenerative siloxane reduction. Our engineers invented the regenerative siloxane reduction system and are directly responsible for more than 50 systems across North America over the past 10 years. The equipment outlined in this proposal is the latest and most advanced technology of it's kind. Other providers only offer imitations of older versions of our design.

With a 100% rate of success and the longest and most successful history of any provider, no one else can provide the confident, guaranteed level of performance we offer.

We look forward to working with you on this project.

Regards;

Brad Huxter
Exclusive Sales Agent
Willexa Energy, LLC
brad.huxter@willexaenergy.com

Your partner in biogas treatment

Willexa energy

Equipment • Media • Parts • Service

Budgetary Proposal

for an

SRS Regenerative Siloxane Reduction System

for

Wenck Associates
City of Fargo LFGTE / CNG Project (800 cfm)

27 April 2016

BIOGAS FILTRATION

SILOXANE REDUCTION

Operating Conditions

This proposal includes a regenerative siloxane reduction system with pre and after filtration to provide reliable and cost effective treatment of digester gas. It is designed to function within the following range of *Operating Conditions*:

Operating Condition	Minimum	Maximum	Units
Inlet Gas Flow	0	800	scfm
Inlet Gas Pressure	18	20	psig
Inlet Gas Temperature	80	90	°F
Inlet Siloxane Level	-	50 (1)	mg/m^3
Inlet NMOC/VOC Level	-	250 (1)	ppmv
Inlet Dew Point	-	40	°F
Inlet Oil Level	-	5	ppmv
Inlet H_2S Level	-	200 (1)	ppmv
Ambient Temperatures	35	100	°F

(1) Typical values only - to be adjusted as necessary prior to purchase depending on future gas analysis results.
(2) For ambient temperatures below 35°F, additional on site heat tracing and insulation (by others) may be required.

Description of Operation

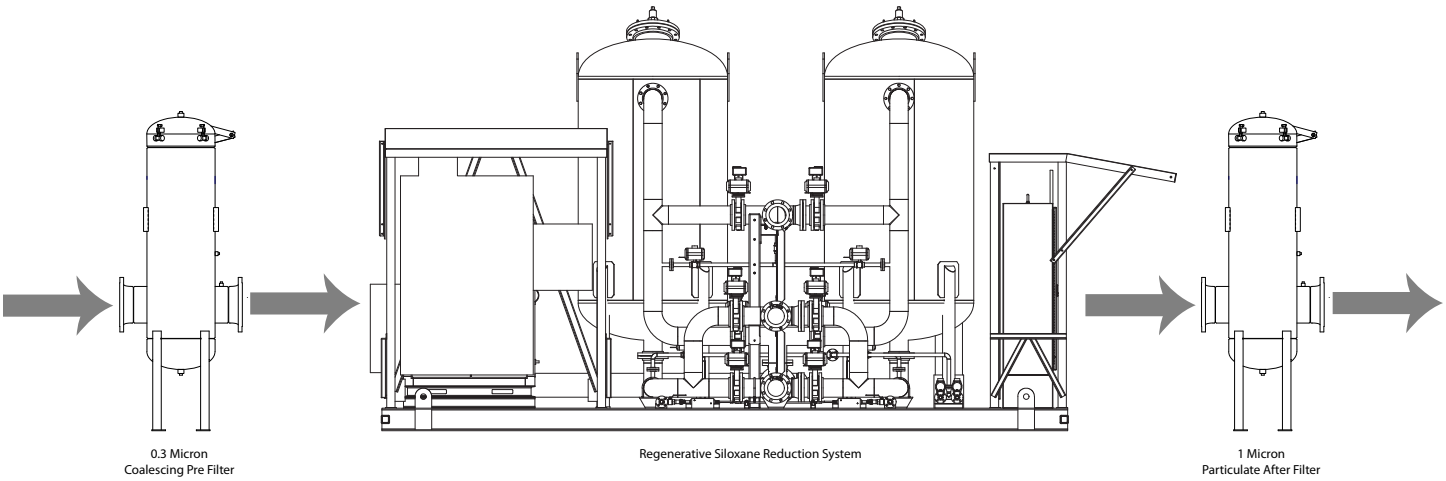

Pre Filter

The Pre Filter includes a single high efficiency coalescing filter element inside a stainless steel pressure vessel. The gas flows through the element from inside to out, where liquid aerosols and solid particulate down to 0.3 micron are captured with greater than 99.9999% efficiency. The solid particulate are trapped within the fibers of the element. The liquid aerosols coalesce into larger droplets, are pushed to the outside of the element, and drain to the bottom of the filter vessel where they must be discharged from the system via an automatic condensate drain (drain provided as an option, or by others).

SRS Regenerative Siloxane Reduction System

The SRS Regenerative Siloxane Reduction system includes two stainless steel pressure vessels filled with desiccant based media in the form of loose beads, as well as all necessary piping, valves, instrumentation, controls and regeneration equipment for the system to operate continuously and automatically with no operator input.

The removal of siloxane vapor is achieved by flowing the contaminated gas upwards through one of the two vessels where the siloxane molecules adhere to the surface of the beads of media through adsorption. Meanwhile, the opposite vessel is off-line being regenerated. After a fixed period of time the two vessels switch. The off-line

(now regenerated) vessel is brought on-line and on-line (now contaminated) vessel is taken off-line to be regenerated. One vessel is always on-line treating the gas stream while one vessel is always off line being regenerated or waiting in standby.

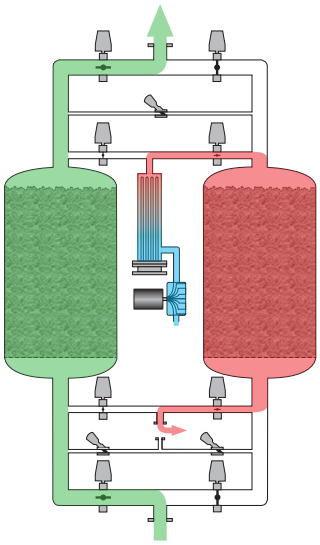

Simplified significantly for clarity.

Regeneration is achieved using a Thermal Swing Adsorption (TSA) process. Heated ambient air provided by a blower and heater flows downwards through the vessel heating the beads of media. The heat breaks the bond between the surface of the beads and the siloxane molecules. The released siloxane molecules are then carried out of the vessel by the air stream.

In addition to siloxanes, the adsorption and regeneration process will also collect many of the other Volatile Organic Compounds (NMOCs/VOCs) found in landfill and digester gas. Because of this, the air used for regeneration cannot (normally) be released to atmosphere, it must be incinerated in an enclosed flare or other appropriate combustion device. (a flare is available as an option.)

Regeneration process control and integration with the flare is critical to prevent flame outs, and to ensure that all combustibles are removed from the media in a slow, controlled manner. The velocity of the regeneration air is therefore carefully controlled with a VFD, and temperature of the air is carefully controlled using an SCR. This ensures that CO_2, NMOCs and other collected compounds desorb from the bed slowly and completely without negatively impacting flare combustion.

Furthermore, the type of media must be carefully selected based on the amount and type of NMOCs present in the gas stream, with consideration for how they will react to the introduction of a heated air stream. Finally, down flow regeneration is always utilized to ensure contaminants migrate towards the flare in the event of a regeneration shutdown.

After Filter

The After Filter includes a single high efficiency particulate filter element inside a stainless steel pressure vessel. The gas flows through the element from outside to in where solid particulate down to 1 micron are captured greater than 99.9999% efficiency. The solid particulate remain trapped within the fibers of the element.

Enclosed Combustion Flare:

Details on the enclosed combustion flare are included in Appendix A.

Equipment Specifications

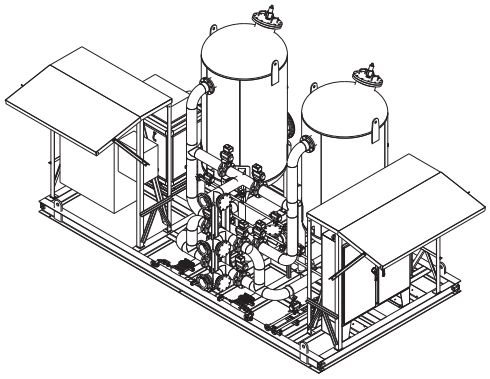

The Equipment consists of the following separate items:

1. (1) Pre Filter,
2. (1) SRS Siloxane Reduction System, and
3. (1) After Filter.

Details for each item are as follows:

1. Pre Filter:

   One 304 stainless steel pre filter housing built in accordance with ASME VIII. Includes a high efficiency 0.3 micron coalescing element for aerosol and particulate removal. An automatic condensate drain valve is required and is available as an option on request.

2. SRS Siloxane Reduction System:

   Consists of the following items:

   a) Media Vessels,
   b) Process Piping Manifolds,
   c) Process Valves,
   d) Repress and Depress Valves,
   e) Instrumentation,

f) Control panel,
g) Regeneration Equipment, and
h) Adsorption Media

These items are installed on a single painted steel skid.

Details for each item are as follows:

a) Media Vessels:

- Vessels are welded 304 stainless steel for all components in contact with the process gas.
- Vessels are built in accordance with ASME VIII and include a U stamp and National Board number when applicable.
- Vessels include internal diffuser screens to ensure gas is distributed evenly across the cross section of the media bed.
- Vessels include thermal pressure relief valves for static pressure relief due to thermal expansion. (Not suitable for full flow pressure relief.)
- Vessels include thermowells with RTDs and temperature gauges.
- Vessel shells (only) are insulated with 2" fiberglass insulation and covered with sealed aluminum cladding for heat retention and personnel protection.

b) Process Piping Manifolds

- Piping is welded 304 stainless steel with ANSI B16.5 Class 150 flanges.
- On skid piping between the heater and the vessels will be insulated with 2" fiberglass insulation and covered with sealed aluminum cladding for heat retention and personnel protection .

c) Process Valves:

- Process valves are high performance butterfly wafer valves with stainless steel body and trim. Valve trim is specifically designed for the chemical and temperature requirements of biogas and TSA regeneration.
- Valves are installed between flanges and include pilot actuators for dual acting pneumatic operation. Pilot air is supplied via rigid stainless steel tubing connected with 3/8" fittings to direct mounted solenoids.
- Valves include limit switches to verify both open and closed positions. Switches are wired to the control panel and are monitored by the PLC to continually verify proper operation.
- Valve operation is 100% tested prior to shipment.

d) Repress and Depress Valves:

- Repress and depress valves are ball valves with stainless steel body and trim. Valve trim is specifically designed for the chemical and temperature requirements of biogas and TSA regeneration.
- Valves include pilot actuators which are pneumatic open, spring return.
- Valve operation is 100% tested prior to shipment.

e) Instrumentation:

- Pressure transmitters measure gas pressure within each media vessel and within the regeneration circuit piping. Transmitters are hard wired to the control panel and monitored and recorded by the PLC. Pressure readings are displayed on local indicators as well as on the Panel View HMI.
- RTDs measure temperature at the process inlet, heater outlet, mid point of the media vessels and the regeneration outlet. RTD's are hardwired to control panel and are monitored and recorded by the PLC. Temperature readings are displayed on local indicators as well as on the Panel View HMI.
- A Type K thermocouple measures the surface temperature of the heater elements. Thermocouple is hardwired to the control panel and controlled by an independent temperature switch for optimum safety. Temperature is displayed on the Panel View HMI.
- All instruments are hard wired to the control panel inside rigid conduit, except for the last 18" which will be in flexible conduit. 120V and 24V wiring will be run in separate conduit.

f) Control Panel:

- PLC is an Allen Bradley CompactLogix Controller with integrated Ethernet/IP port.
- Operator interface is an Allen Bradley PanelView 1000 Touch Screen. Remote mounting and/or a secondary HMI are available as options on request.
- Separate high and low voltage panels are provided for operator safety. The high

PanelView 1000 TS HMI

voltage panel may be remote mounted as an option on request.

- Control panels are painted carbon steel construction with NEMA 4X classification. When required for a Class 1 Div 2 environment, a purge and pressurizing system is available as an option.
- The high voltage panel includes fuses, contactors, variable speed drive (VFD) and silicone control rectifier (SCR). Heater contactors are constantly monitored by the PLC.

g) Regeneration Equipment:

- One (1) centrifugal blower and motor. Blower speed is precisely controlled by a Variable Speed Drive (VFD) to ensure a stable regeneration process and safe and reliable operation of the flare.
- One (1) low watt density electric heater in an insulated carbon steel housing with 2" fiberglass insulation covered in sealed aluminum cladding for heat retention and personnel protection. Heater temperature is precisely controlled by a Silicon Controlled Rectifier (SCR) to ensure a stable regeneration process with minimum power consumption. Element surface temperature and heater outlet temperature are measured by the PLC and are part of control logic and safety features.
- A heat exchanger to utilize hot jacket water to reduce electric heater power consumption is available as an option.

h) Adsorption Media:

- The initial charge of media is included. Media includes an active bed support and a high performance siloxane adsorption media.
- Media is shipped loose for installation on-site by others.
- A Willexa Energy technician to oversee media installation is provided.

3. After Filter:

   One 304 stainless steel after filter housing built in accordance with ASME VIII. Includes a high efficiency 1 micron particulate element for media dust removal.

Engineering Data

Vessels:

	Quantity	MAWP	Contains	Purpose
Pre Filter	1	14 psig	0.3 Micron Coalescing Element	Media Protection
Media Vessels	2	14 psig	Regenerative Adsorption Media	Siloxane Reduction
After Filter	1	14 psig	1 micron Particulate Element	Downstream Dust Protection

Valves:

	Type	Body & Trim	Diameter	Actuator
Process Control Valves	High Performance Butterfly	Stainless Steel	TBA	Dual Acting Pneumatic
Repress & Depress Valves	Ball Valves	Stainless Steel	1"	Pneumatic Open Spring Return

Piping:

	Size	Type	Material of Construction	Max Working Pressure	Flanges
Main Process Piping	TBA	Butt-Weld	Stainless Steel	14 psig	ANSI B16.5 Class 150
Regeneration Piping	TBA	Butt-Weld	Stainless Steel	14 psig	ANSI B16.5 Class 150
Branch Piping	TBA	Butt-Weld	Stainless Steel	14 psig	ANSI B16.5 Class 150
Repress & Depress Piping	1"	Welded / Socket Weld	Stainless Steel	14 psig	ANSI B16.5 Class 150
Compressed Air Piping	1"	Threaded	Galvanized	100 psig	-
Control Air Tubing	3/8"	Rigid	Stainless Steel	100 psig	-

Regeneration Equipment

	Type	Size	Protection	Control
Blower	Centrifugal	25 hp	NEMA 4	Variable Speed Drive
Heater	Low Watt Density	80 kW	Insulated Steel Housing	Silicon Control Rectifier

Safety & Reliability

Safe and reliable operation of the system is ensured through the following components and processes:

Electrical Design:

- Separate high voltage and low voltage panel sections ensure optimum operator safety.

Regeneration Blower:

- A VFD (Variable Frequency Drive) controls the regeneration air blower, ramping it up slowly during start up or restart to ensure safe and steady operation of the flare.

Regeneration Heater:

- An SCR (Silicon Control Rectifier) controls the heater to ensures precise heater control and redundant safety.
- Fuses, contactors and heater outlet temperature are monitored by the PLC to ensure and verify proper and safe operation.
- Low watt density heating elements are used to extend heater life and to ensure the element surface temperatures remain well below the flash point of biogas. In addition, the heater element surface temperatures is monitored by the PLC and controlled using an independent temperature switch.

Regeneration Process Control:

- Prior to regeneration the media vessel is depressurized then sealed and leak tested. Any pressure rise (indicating a leak from the pressurized side of the process) will immediately stop the regeneration process under alarm.
- Limit switches and pressure transmitters are used during the gas-to-air and air-to-gas transition steps to ensure a safe atmosphere inside the vessel prior to initiating regeneration or bringing a vessel back on-line. In addition, dedicated piping circuits for these transition steps ensure 100% control of the process.
- If regeneration is interrupted, once the blower has returned to full speed, the SRS system will revert back to the point in the cycle where the interruption occurred, and continue the regeneration process.
- Down-flow regeneration ensures that during any regeneration interruption, any concentrated NMOCs continue safely towards the flare, rather than back towards the blower, where they could potentially escape into the facility. Plus, upon restart, the VFD ensures these concentrated NMOCs are fed to the flare in a slow controlled manner.
- After completing regeneration the off-line vessel is purged with clean biogas from the downstream side of the process to ensure the removal of oxygen from the vessel prior to returning it to service, and to pre-load the bed with CO_2 to eliminate any methane spike after switch over. This methane rich purge gas can be sent back to a low pressure point in the process reducing gas and flare usage.

Other Available Options

Class 1 Division 2 Electrical Protection

Includes a purge and pressurization system for the control panels when required for a Class 1 Division 2 hazardous environment.

Hot Water Heat Exchanger

Allows the use of hot jacket water (or another heat source) to pre heat the air for regeneration, thereby reducing power consumption of the electric heater.

Dew Point Monitor

Provides a precision hygrometer integrated into the SRS controls. Dew point is monitored and recorded by the PLC and displayed on the Panel View HMI.

Dual Pre & After Filtration Skids

Replaces the standard single pre and after filters with dual pre and after filters mounted on skids with isolation and bypass valves. Reduces pressure drop and provides both filter bypass capability for maintenance and operational redundancy.

Start Up & Commissioning

Five days of start up and commissioning services by a Willexa Energy engineer and/or technician is included. (For sites outside the Continental US, travel is invoiced separately.) The site operator must provide Willexa a minimum of three weeks notice of the date they wish start up and commissioning procedure to begin.

Access to the installation site and the Siloxane Reduction System must be granted to Willexa personnel as required. Willexa will provide a minimum 48 hour notice of any visits to site and will coordinate all visits with the site operator.

If start up and commissioning of the Siloxane Reduction System cannot be completed within the allotted time, or a second trip to site is required due issues outside of Willexa Energy's control (including but not limited to: incomplete or incorrect installation, issues or delays starting upstream or downstream equipment, or issues with a third party provided flare) we reserve the right to request compensation for additional travel and labor costs at our standard published rates.

Installation Requirements

Equipment installation is not included in the scope of supply. The customer is required to provide:

- Installation of all equipment on a suitable foundation and with appropriate maintenance access.
  - Piping to, from and between all pieces of equipment including
  - to the inlet of the Pre Filter & outlet of the After Filter
  - between the Siloxane Reduction System, Pre Filter, and After Filter
  - Piping between the Siloxane Reduction Systemd and the Flare, including a suitable flame arrestors and condensate drains directed by the flare provider.
- Additional insulation and heat tracing of piping and vessels as required by ambient conditions, for personnel protection, and/or as otherwise directed by Willexa Energy.
- Piping to the Instrument Air Inlet Connection with a minimum of 10 scfm of instrument air between 80 and 100 psig.
- A 480/3/60 power supply to the High Voltage Panel.
- Installation of initial charge of Adsorption Media.

This list is not all inclusive. Detailed Installation Instructions will be provided. Willexa Energy will provide a technician to oversee Media filling and will inspect system for proper installation prior to commissioning.

Parasitic Loads

Continuous operation of the Siloxane Reduction System requires the electrical loads for the blower and heater and sufficient compression to overcome the total system pressure drop:

Item	Blower	Heater	Pressure Drop
Requirements	25 hp	80 kW	~ 3 psid (1)
Load	~100%	~50% avg	-
Hours per day	12 (2)	8 (2)	24

(1) Across the entire system, including pre filter, SRS, carbon polisher and after filter (with clean elements).
(2) Blower & Heater run times are estimates that will vary with changing ambient conditions and site system configuration.

Required:

Item	Total
Pre Filter [1]	$14,500
SRS Regenerative Siloxane Reduction System	$420,000
After Filter [2]	$14,500
Total:	$449,000

Options

Item	Total
Enclosed Combustion Flare	$169,000
400 - 1000 scfm Carbon Polisher for CNG process [3]	$99,000

Notes:

1. *Pre Filter is required unless equivalent or better filtration is (or will be) installed immediately upstream.*
2. *After Filter is optional though highly recommended, as media dust can be damaging to downstream equipment.*

Pricing Terms

- Pricing is budgetary and subject to confirmation prior to order acceptance.
- All pricing is FOB Factory (domestic points of origin).
- Freight and taxes are not included.
- All pricing is NET 30 subject to a progress payment schedule as follows:
  - 25% due upon purchase order approval
  - 25% due upon approval drawing submittal
  - 25% due upon receipt of major components
  - 20% due upon shipment (or when ready to ship)
  - 5% due upon start-up (or 120 days after shipment, whichever occurs first)

Consumables

Estimated consumable replacement frequency and costs are as follows:

Item	Regenerative Media	Filter Elements
Quantity	10,000 lbs (5,000 per vessel)	2 (1 per filter)
Replacement Frequency	~18 months	~18 months
Cost	$1.50 / lb	$1,500 each
Total Cost per Change-out	$15,000	$3,000 total
Annual Cost	$10K / year	$2K / year

Contact Information

For questions, further information, a formal or hard copy of this proposal, or to issue a purchase order for the equipment outlined above, please contact Brad Huxter at 704-560-8895, or brad.huxter@willexaenergy.com.

Appendix B – Equipment Quotes – Phase 2

BioCNG Web Page Entry Form

USER INFORMATION (Required)	
Company Name	Wenck Assoc.
Contact Name	Noel Kempfert
Address 1	
Address 2 (optional)	
City	Fargo
State	North Dakota
Zip Code	
Email Address	
Site Name	WWTP
Site State	North Dakota

BioCNG INFORMATION (Required)		
Enter the methane concentration of your raw biogas	56.2%	Note: must be greater than 52%; if less than 52% discuss with Mike DiMaggio for Special Case estimate.
Enter the size BioCNG system would you like to analyze	400	Note: for larger systems, discuss with Mike DiMaggio.
What is the cost for electricity ($/kWh) to operate equipment at your site?	$0.070	Default at 7 cents per kWh, allow other entries.
Does the ambient air temperature at your site fall below 32 degrees F for more than 3 nights per year?	yes	
Would you like your analysis to be in diesel or gasoline units?	GGE	

FUELING STATION INFORMATION (Required)		
Would you like BioCNG to also provide a Fueling Station?	yes	
If no, end here and enter data into the Operational cells below		
If yes, answer the following questions....		
Type of fueling station:	Fast	
Total amount of CNG storage desired on-site (percentage of daily fuel production):	20%	Note: We recommend approx. 50% for fast filling stations and approx. 25% for combination time and fast fill stations.
How many dual hose fast fill dispensers would you like included?	1	
How many dual hose time fill posts would you like included?	0	

OPERATIONAL, FINANCING and/or DEPRECIATION INFORMATION (Optional)		
Hours per day in operation	23	
Days of Operation/week	7	
Weeks per year	52	
Desired finance period and/or depreciation (months)	120	
Cost to purchase biogas from owner (per MMBTU)	$0.00	
Annual Interest on CapX	0.00%	
RINs?	yes	Note: Currently food digesters do not qualify for RIN's
RIN D5 Pricing http://www.cmegroup.com/trading/energy/refined-products/d5-advanced-biofuel-rins-argus-2013.html	$1.50	

Standard Size of BioCNG Equipment

Model #	BIOGAS INLET FLOW (SCFM)	RANGE OF FUEL PRODUCTION PER DAY	RANGE OF FUEL PRODUCTION PER DAY
BioCNG 50	50	300 - 375 GGE	260 - 325 DGE
BioCNG 100	100	600 - 750 GGE	520 - 650 DGE
BioCNG 200	200	1200 - 1500 GGE	1000 - 1300 DGE
BioCNG 400	400	2400 - 3000 GGE	2000 - 2600 DGE
2-BioCNG 400	800		

BioCNG System - Turnkey Estimate

BioCNG Cleanup Equipment Size: 400
Date: 3/9/2016

Assumptions For This Estimate	
BioCNG Information:	
Methane concentration of your raw biogas:	56.2%
Size BioCNG system would you like to analyze:	400
Cost for electricity ($/kWh) to operate equipment at your site:	$0.070
Does the ambient air temperature at your site fall below 32°F for more than 3 nights per year?	yes
Would you like your analysis to be in diesel or gasoline units?	GGE
Fueling Station Information:	
Would you like BioCNG to also provide a Fueling Station?	yes
Type of fueling station:	Fast
Volume of BioCNG fuel storage desired on-site (% of daily production):	20%
How many dual hose, fast fill dispensers would you like included?	1
How many dual hose, time fill posts would you like?	N/A
Operational Information:	
Hours per day in operation:	23
Days of Operation/week:	7
Weeks per year:	52
Financing and/or Depreciation Information:	
Desired finance and/or depreciation period (months):	120
Cost to purchase biogas from owner ($ per MMBTU):	$0.00
Annual Interest on CapX:	0.0%
RIN D5 Pricing (based on 77,000 BTU's per RIN)	$1.50
Include RINs?	yes

Client/Site Information
Wenck Assoc.
Noel Kempfert
0
Fargo
North Dakota
0
0
WWTP
North Dakota

Results: $ (0.92) **per GGE (during the finance/depreciation period, including RINs)**

Equipment

Cap X	$	Notes	
Biogas Cleanup Equipment:			
BioCNG 400:	$ 1,380,000	Gas compression to 100 psig; gas chilled to 40°F; H_2S reduction for 5 ppm; Si/VOC reduction for 250 ppb.	
Skid Mouted Control Panel:	$ 45,000	BioCNG Unit comes in 3 sections with all wiring for easier installation	
H2S Deduct:	$ (209,530)	Customer will do his own H2S Removal and guarantees less than 5 ppmv	
Winterization:	$ 117,300	Heated and insulated structure over other equipment. (No H2S Vessel)	
Fueling Station Equipment:			
Fast Fill Station:	$ 465,000	Includes one compressor, priority panel for cascade filling, & one gas dryer	
Fast Fill Dispenser with Credit Card Reader(s):	$ 80,000	Note: 2 hoses per dispenser.	
Time Fill Post(s):	$ -	Note: 2 hoses per post.	
Low Pressure Storage Tank:	$ 155,000	Note: Low pressure storage tank, Max.250 psi	
Storage at Fueling Station:	$ 450,000	3 Banks of Storage Included	510 GGE of total storage capacity
		Estimated Delivery Charge of Fueling Equipment (if blank not included)	
Total Equipment CapX	**$ 2,482,770**	50% due upon written P.O.; 40% due upon delivery of equipment on-site; 10% due within 30 days after startup.	
Grant or State Tax Credits:		*Research by following the link provided below (grants listed here are not a guarantee that you will qualify, nor that you will receive funds).*	
Total Equipment CapX (less tax credits and grants)	**$ 2,482,770**	Used in the proforma below.	
Link to Grant or State Tax Credit Information:		http://www.afdc.energy.gov/afdc/laws/state_summary/ND	

Note: CapX is firm for 30 days and subject to change thereafter.

Services from Cornerstone

Description	$	Notes
Site Design/Layout:	$ 150,000	Budgetary costs below will be finalized after this task. Assumes Seismic Zone 0 for design and equipment.
Permitting:	$ -	Budgetary - N/A
Installation of BioCNG Skid:	$ -	Budgetary - N/A
Installation of Fueling Station:	$ -	Budgetary - N/A
Installation of Time Fueling Post(s):	$ -	N/A
Startup Services & Training:	$ 80,000	Budgetary - 5 days on-site.
Total	**$ 230,000**	To be billed T&M on a monthly basis.

BioCNG - O&M Estimate

Cost Item	$	Notes	
Media and Equipment Replacements:	$ 0.25	per GGE. Refer to the attached O&M cost estimate	
Parasitic Electrical Load for BioCNG and Fueling Station:	$ 0.19	per GGE	1,950,676 kWh per year
O&M Total	**$ 0.44**	per GGE	
O&M (total monthly cost)	**$ 26,177**		

Preliminary Financial Analysis

Assumptions	Value	Notes	
Assumed Methane Concentration of Raw Biogas:	56.2%		
BioCNG Fuel Production:	85	GGE per Hour	
	1,953	GGE per Day	
	13,670	GGE per Week	
	59,236	GGE per Month	
	710,837	GGE per Year	
Equipment Cap X (from above):	$ 2,482,770		
Cumulative Interest on Equipment CapX:	$ -		
Services (from above):	$ 230,000		
Total CapX	**$ 2,712,770**		
Waste Gas: *(expected flow to be destructed in a flare, or other device)*	243	scfm	*Waste Gas will have 20 to 25% CH_4 concentration. Costs for modifying a flare are not included.*

Assumptions:
1) Diesel at 128,400 BTU/gal; Gasoline at 111,200 BTU/gal.

Renewable Fuel Credits			
Note: BioCNG produced from landfills, farm digesters, and WWTP digesters are eligible to receive Renewable Fuel Standard Credits via RINs (Renewable Identification Numbers).			
RIN's for this operating scenario will amount to approximately: *(after broker fees & third-party verification costs)*	$ 1,535,408	per Year	*This estimate is provided with no guarantee; confirm with a broker for an actual quote. One example broker's web link is provided below.*
RIN value	**$ 2.16**	per GGE	
RIN Information:		http://www.epa.gov/otaq/fuels/renewablefuels/compliancehelp/rfs2-ag.htm	
Link to one example broker:		http://www.carbonsolutionsgroup.com/bf.html	

Cost of Raw Biogas		
Amount of biogas purchased per year (excludes methane returned to the flare or other destruction device):	79,045	MMBTU at methane content & operational hours listed above
Cost of biogas purchased from the owner:	$ -	per year
	$ -	per GGE

Summary			
Cost to Operate and Maintain BioCNG and Fueling Station:	$ 0.44	per GGE	
Cost to Finance and/or Depreciation:	$ 0.38	per GGE (includes CapX, Finance Charge, and Services)	
Subtotal	**$ 0.82**	**per GGE (during the finance/depreciation period)**	
Federal Excise Tax:	$ 0.184	per GGE	http://www.fhwa.dot.gov/policyinformation/statistics/2010/fe21b.cfm
State Road/Excise Tax:	$ 0.23	per GGE (confirm value by checking the State-specific Dept. of Revenue and web site link provided below)	
Cost to Purchase Raw Biogas:	$ -	per GGE	
Value of RIN's:	$ (2.16)	per GGE	RIN D5 Pricing (based on 77,000 BTU's per RIN)
Total	**$ (0.92)**	**per GGE (during the finance/depreciation period, including RINs)**	
Link to State Road/Excise Tax Information:		http://www.iftach.org/taxmatrix3/choose_tableq2.php	

Assumptions:
1) Project is exempt from all sales tax, fees, etc. If not exempt, purchaser agrees these costs will be paid by purchaser.
2) CapX and Services pricing are valid for 30 days.
3) Does not include shipping.
4) RIN D5 Pricing (based on 77,000 BTU's per RIN)

BioCNG Media and Replacement Cost Estimate

Maintenance Item	Change Out / Replacement Interval	Each Change Out / Replacement Cost					Annualized Change Out / Replacement Cost				
						Custom					Custom
	BioCNG 100, 200 and 400	**BioCNG 50**	**BioCNG 100**	**BioCNG 200**	**BioCNG 400**	**2-BioCNG 400**	**BioCNG 50**	**BioCNG 100**	**BioCNG 200**	**BioCNG 400**	**2-BioCNG 400**
Hydrogen Sulfide Media		$ -	$ -	$ -	$ -	$ -	$ -	$ -	$ -	$ -	$ -
VOC/Siloxane Media	2 years	$ 1,450	$ 3,754	$ 6,975	$ 14,300	$ 14,300	$ 725	$ 1,877	$ 3,487.50	$ 7,150	$ 7,150
Oil, CO2 Sensor and Align	1 year	$ 2,000	$ 2,500	$ 3,000	$ 6,000	$ 6,000	$ 2,000	$ 2,500	$ 3,000	$ 6,000	$ 6,000
Gas Compressor (refubish)	10 years	$ 5,800	$ 8,200	$ 8,200	$ 16,400	$ 16,400	$ 580	$ 820	$ 820	$ 1,640	$ 1,640
Modulating Valve (refurbish)	5 years	$ 2,500	$ 2,500	$ 2,500	$ 5,000	$ 5,000	$ 500	$ 500	$ 500	$ 1,000	$ 1,000
Chiller Compressor (new)	5 years	$ 1,500	$ 2,000	$ 4,000	$ 10,000	$ 10,000	$ 300	$ 400	$ 800	$ 2,000	$ 2,000
RIN Broker Fee	3 year	$ 25,000	$ 28,000	$ 32,000	$ 37,000	$ 37,000	$ 8,333	$ 9,333	$ 10,667	$ 12,333	$ 12,333
					subtotal		**$ 12,438**	**$ 15,430**	**$ 19,274**	**$ 30,123**	**$ 30,123**
Labor Type	Hourly Rate	Labor Hours per year					Labor Costs per year				
Labor	$75	100	125	150	200	200	$ 7,500	$ 9,375	$ 11,250	$ 15,000	$ 15,000
Management	$150	30	30	30	30	30	$ 4,500	$ 4,500	$ 4,500	$ 4,500	$ 4,500
						subtotal	**$ 12,000**	**$ 13,875**	**$ 15,750**	**$ 19,500**	**$ 19,500**
						TOTAL	**$ 24,438**	**$ 29,305**	**$ 35,024**	**$ 49,623**	**$ 49,623**
				Average BioCNG Fuel Production	GGE	per year	-	-	-	710,837	2
				Average Fueling Station O&M	GGE		$ 0.18	$ 0.18	$ 0.18	$ 0.18	$ 0.18
				Average Media O&M Cost per	GGE		-	-	-	$ 0.25	$ 24,811.85

Notes:

(1) Hydrogen sulfide changeout rate based on Customer will do his own H2S Removal and guarantees less than 5 ppmv

(2) VOC/Siloxane changeout rate based on a VOC/Siloxane cocentration of 250 ppbv at maximum flow rate.

(3) Oil Change, CO2 Sensor and Laser alignment of Compressor: 4 hours

(4) Labor requirements for changeout of hydrogen sulfide and VOC media: 2 staff members, 12 hours (for each unit)

(5) All piping, tanks, and vessels are assumed to have a 20 year life span.

(6) General operations will require approximately 2 hours of labor per week.

(7) These cost assume work to be performed by owner of equipment without markup that may be required if an outside party purchased the parts or performed the labor.

(8) Verification fees included in Broker fee (annualized cost of verification required every 3 years).

(9) These costs include fueling station O&M.

BioCNG™

WENCK ASSOCIATES

Responsive partner.
Exceptional outcomes.

Toll Free: 800-472-2232 **Email: wenckmp@wenck.com** **Web: wenck.com**

MINNESOTA
Maple Plain 763-479-4200
Golden Valley 763-252-6800
Windom 507-831-2703
New Hope 800-368-8831
Woodbury 651-294-4580

COLORADO
Denver 602-370-7420
Fort Collins 970-223-4705

GEORGIA
Roswell 678-987-5840

NORTH DAKOTA
Fargo 701-297-9600
Mandan 701-751-3370
Dickinson 800-472-2232

SOUTH DAKOTA
Pierre 605-222-1826

WYOMING
Cheyenne 307-634-7848
Sheridan 307-675-1148

Appendix E

Xcel Energy Letter

Xcel Energy®

2302 Great Northern Drive
P. O. Box 2747
Fargo, North Dakota 58108

February 3, 2016

ND Department of Commerce
Andrea Holl Pfennig
1600 E. Century Avenue, Suite 2
Bismarck, ND 58502-2057
701-426-9827
ahpfennig@nd.gov

Dear Mrs. Pfennig,

Xcel Energy is pleased the City of Fargo is encouraging us to join forces on their compressed natural gas (CNG) project. Xcel Energy can offer industry expertise on CNG applications, as well as codes and standards to build a safe and reliable system. Xcel Energy has the infrastructure to supply natural gas to the City of Fargo fueling station during most time periods if the land fill gas is unavailable.

Xcel Energy pursues environmental excellence and innovation in our corporate strategy and daily operations. We set a cornerstone of outstanding environmental compliance and build upon that foundation to pursue industry-leading initiatives that enhance customer and shareholder value while demonstrating respect for our communities and concern for the environment. We advance voluntary programs that go beyond current standards of environmental performance and demonstrate environmental leadership.

We want to applaud the City of Fargo for being on the forefront in North Dakota in their efforts to be more efficient in their utilization of energy. We appreciate the fact we will have the opportunity to review the results from this project and we may well be able to help other entities explore projects of this nature in the future.

Sincerely,

Mark Nisbet
ND Principal Manager

Cc: Terry Ludlum, City of Fargo

Appendix F

Wenck Phasing Timeline

ID	Task ID	Task Name	Duration	Start
1		**Phase 1**		
2		Prepare Request for Proposal for Equipment (Wenck Associates)	30 days	Fri 7/1/16
3		Advertise for Equipment (City of Fargo)	30 days	Mon 8/1/16
4		Select/Procure Equipment (City of Fargo and Wenck Associates)	45 days	Thu 9/1/16
5		Equipment Shop Drawings Reviewed/Approved (Wenck Associates)	6 wks	Mon 10/3/16
6		Building and Delivery of Equipment (Selected Contractor)	26 wks	Thu 12/1/16
7		Design of Balance of Plant (Wenck Associates)	8 wks	Mon 2/1/16
8		Prepare Bid Documents for General Installation Contractor (Wenck Associates)	3 wks	Mon 5/1/17
9		Award Contract (City of Fargo)	4 wks	Mon 7/3/17
10		Construction Phase (City of Fargo, Wenck Associates and Selected Contractor)	6 wks	Tue 8/1/17
11		Startup and Training (City of Fargo, Wenck Associates and Selected Contractor)	2 wks	Mon 10/2/17
12		Operations (City of Fargo)		
13		**Phase 2**		
14		Prepare Request for Proposal for Equipment (Wenck Associates)	30 days	Thu 3/1/18
15		Advertise for Equipment (City of Fargo)	30 days	Mon 4/2/18
16		Select/Procure Equipment (City of Fargo and Wenck Associates)	45 days	Fri 6/1/18
17		Equipment Shop Drawings Reviewed/Approved (Wenck Associates)	6 wks	Mon 7/2/18
18		Building and Delivery of Equipment (Selected Contractor)	26 wks	Mon 9/3/18
19		Design of Balance of Plant (Wenck Associates)	8 wks	Thu 11/1/18
20		Prepare Bid Documents for General Installation Contractor (Wenck Associates)	3 wks	Tue 1/1/19
21		Award Contract (City of Fargo)	4 wks	Fri 3/1/19
22		Construction Phase (City of Fargo, Wenck Associates and Selected Contractor)	6 wks	Mon 7/1/19
23		Startup and Training (City of Fargo, Wenck Associates and Selected Contractor)	2 wks	Mon 9/2/19
24		Operations (City of Fargo)		

Project: Phase 1 and 2 Schedule
Date: Wed 4/27/16

Task · Split · Milestone · Summary · Project Summary · External Tasks · External Milestone · Inactive Task · Inactive Milestone · Inactive Summary · Manual Task · Duration-only · Manual Summary Rollup · Manual Summary · Start-only · Finish-only · Deadline · Critical · Critical Split · Baseline · Baseline Milestone · Baseline Summary · Progress

ID	Task Name	Duration	Start
1	**Phase 1**		
2	Prepare Request for Proposal for Equipment (Wenck Associates)	30 days	Fri 7/1/16
3	Advertise for Equipment (City of Fargo)	30 days	Mon 8/1/16
4	Select/Procure Equipment (City of Fargo and Wenck Associates)	45 days	Thu 9/1/16
5	Equipment Shop Drawings Reviewed/Approved (Wenck Associates)	6 wks	Mon 10/3/16
6	Building and Delivery of Equipment (Selected Contractor)	26 wks	Thu 12/1/16
7	Design of Balance of Plant (Wenck Associates)	8 wks	Mon 2/1/16
8	Prepare Bid Documents for General Installation Contractor (Wenck Associates)	3 wks	Mon 5/1/17
9	Award Contract (City of Fargo)	4 wks	Mon 7/3/17
10	Construction Phase (City of Fargo, Wenck Associates and Selected Contractor)	6 wks	Tue 8/1/17
11	Startup and Training (City of Fargo, Wenck Associates and Selected Contractor)	2 wks	Mon 10/2/17
12	Operations (City of Fargo)		
13	**Phase 2**		
14	Prepare Request for Proposal for Equipment (Wenck Associates)	30 days	Thu 3/1/18
15	Advertise for Equipment (City of Fargo)	30 days	Mon 4/2/18
16	Select/Procure Equipment (City of Fargo and Wenck Associates)	45 days	Fri 6/1/18
17	Equipment Shop Drawings Reviewed/Approved (Wenck Associates)	6 wks	Mon 7/2/18
18	Building and Delivery of Equipment (Selected Contractor)	26 wks	Mon 9/3/18
19	Design of Balance of Plant (Wenck Associates)	8 wks	Thu 11/1/18
20	Prepare Bid Documents for General Installation Contractor (Wenck Associates)	3 wks	Tue 1/1/19
21	Award Contract (City of Fargo)	4 wks	Fri 3/1/19
22	Construction Phase (City of Fargo, Wenck Associates and Selected Contractor)	6 wks	Mon 7/1/19
23	Startup and Training (City of Fargo, Wenck Associates and Selected Contractor)	2 wks	Mon 9/2/19
24	Operations (City of Fargo)		

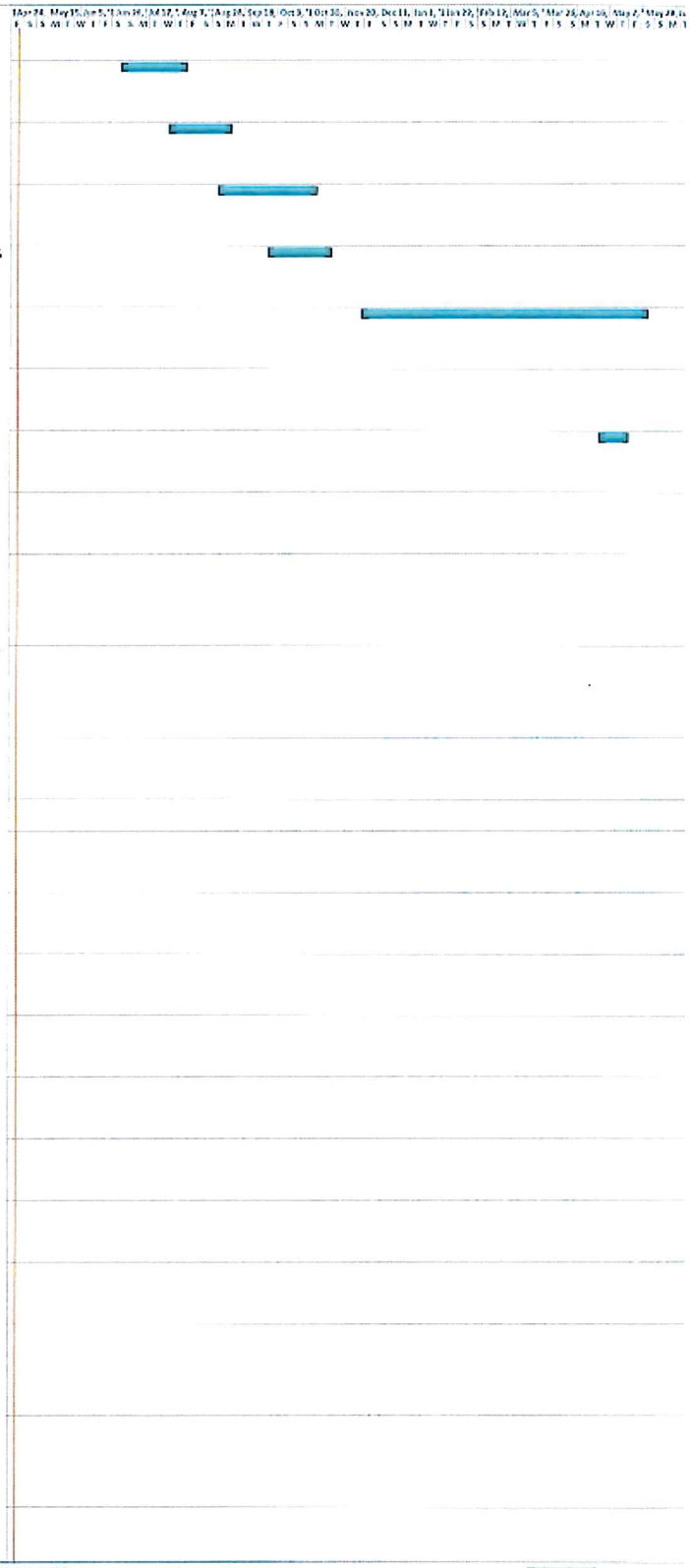

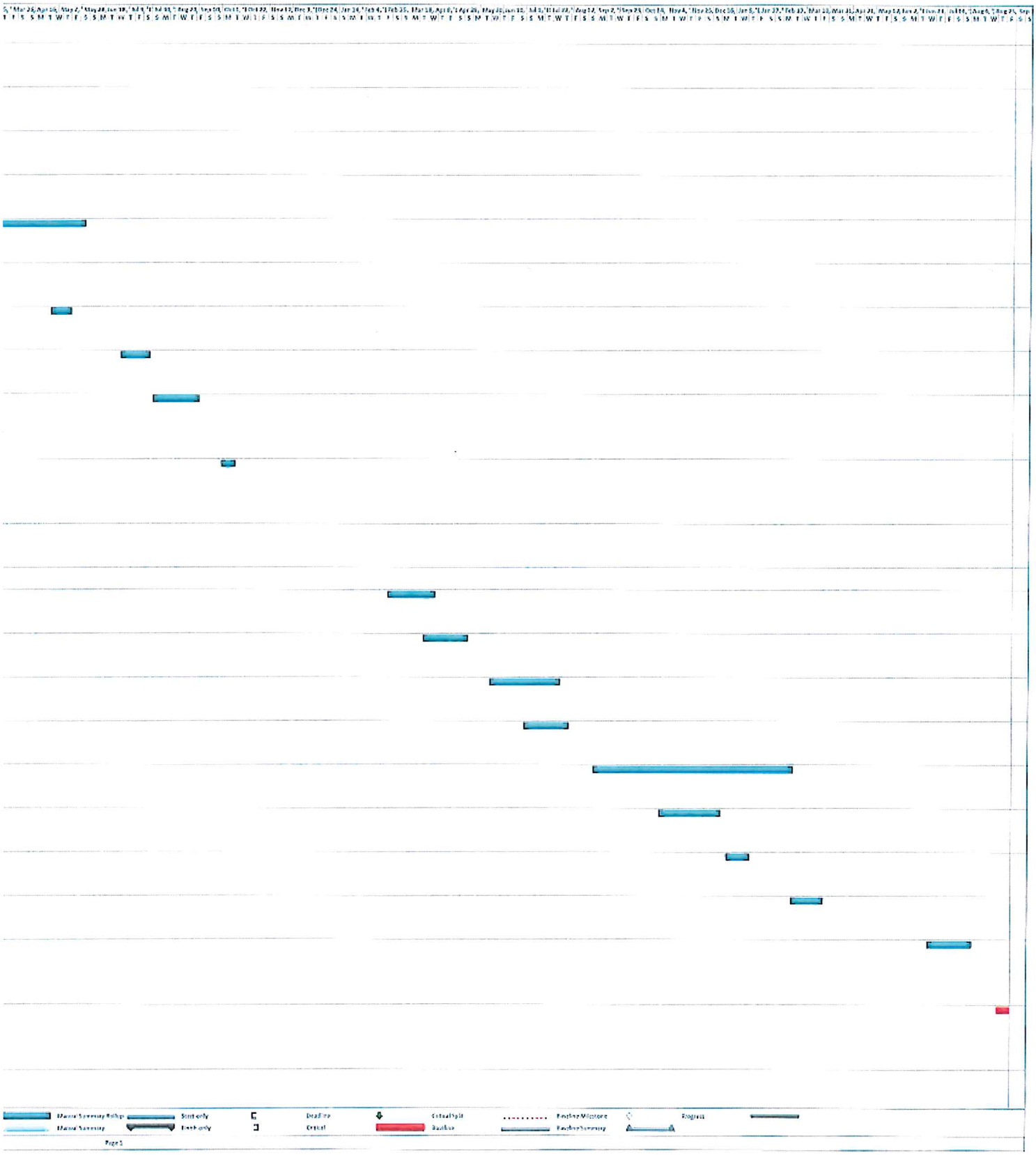
Page 5