BLAISE ENERGY INC.

Appendix A – Site 1 Technical Project Brief

Site Submission Deliverable & Details
EM Richardson 25-13H

Pascal Boudreau

8/17/2010

UPDATE: 7/7/2011

Technical project description with emission calculations and offsets to quantify impact.

1. Project Overview

Blaise Energy's Solution conserves a valuable Resource by transforming otherwise wasted wellhead flare gas into high quality, reliable, environmentally friendly electricity. The Blaise Solution consists of diverting the wellhead gas before it is flared and burning it more efficiently in an on-site generator, sending the electricity back into the local grid. Classified as "Recycled Energy" in North Dakota, Blaise Energy's electricity demonstrates the efficient use of resources and reduces green house gas emissions through reduced flaring. Every additional megawatt generated in this clean fashion displaces an equivalent amount of electricity produced by less environmentally friendly sources. This project consists of a single well currently being flared due to lack of pipeline facilities. The EM Richardson 25-13H flares 76 Mcfd (@1387 BTU/cf) and is electrified. The Blaise solution will consume the gas as is which is enough to support a 300 KW generator and in the process will prevent the wasting of 38 Billion BTU per year.

- The project will generate 300 KW of electricity by recycling approximately 76 Mcfd of gas (1387 BTU/cf). The power produced from this otherwise wasted resource is enough to supply power to 300 homes. This solution has the true potential of displacing other sources of generation due to its predictable and consistent generation.
- Estimated starting yearly **emissions reductions** based on flare elimination and coal generation offset: **4,900 tons of CO_2, 4 tons of CO, 6 tons of NOx, and 1.5 tons of VOCs (The following estimates are based on available EPA Emission factors)**

2. Submission Deliverables

Blaise Energy Inc. agrees to perform the work described in Exhibit A, entitled "Flare Gas – Power Generation Commercial Viability Pilot", which is attached to this contract and is made a part of it. In addition, prior to commencing each project Blaise is hereby providing the following:

- A description of the site location;
  - ***SECTION 25SWSW, T164N, R88W of BURKE COUNTY, NORTH DAKOTA or commonly referred to as EM RICHARDSON 25-13H (the "Site") – See Section 3.1***
- An adequate description of the gas quality and attendant quantities;
  - ***76 Mcfd @ 1387 BTU/cf, 0.00% H_2S - See Section 3.2***
- An adequate description as to how the attendant quality constraints of these gas streams will be addressed;
  - ***No constraints, gas will be consumed as delivered - See Section 4***
- An adequate description of the equipment that will be utilized/purchased, along with attendant size/cost and financing considerations;
  - ***Gas generator, switching and control equipment - See Section 4***
- A project management plan with a timetable for achieving the project milestones;
  - ***See Section 6***
- Identification of match funding.
  - ***See Section 5***

3. Site Specifics

3.1. Location

SECTION 25SWSW, T164N, R88W of BURKE COUNTY, NORTH DAKOTA or commonly referred to as EM RICHARDSON 25-13H.

3.2. Gas Composition and volume

76Mcfd @ 1387 BTU/cf

Gas Analysis:

COMPONENT	MOLE %	GPM
Nitrogen	3.07	0.000
Methane	67.49	0.000
Carbon Dioxide	0.00	0.000
Ethane	14.69	3.922
H2S	0.00	0.000
Propane	7.80	2.139
i-Butane	0.96	0.313
n-Butane	2.73	0.857
i-Pentane	0.67	0.244
n-Pentane	0.86	0.310
Hexanes+	1.73	0.758
Oxygen/Argon	0.00	0.000
Total	100.00	8.542

CALCULATED SPECIFIC GRAVITY 0.8421 (Air =1.0000)

CALCULATED GROSS BTU/ft³ 1387 (Saturated) 1411 (Dry) at 14.73 psi and 60°F

REMARKS On-Site H2S = Trace Amount

3.3. Electrical

Three phase power already servicing the site. Interconnect with Burke-Divide Electric Coop.

SEE INTERCONNECT DOCUMENT FOR FINAL INTERCONNECT DETAILS

Interconnect Diagram

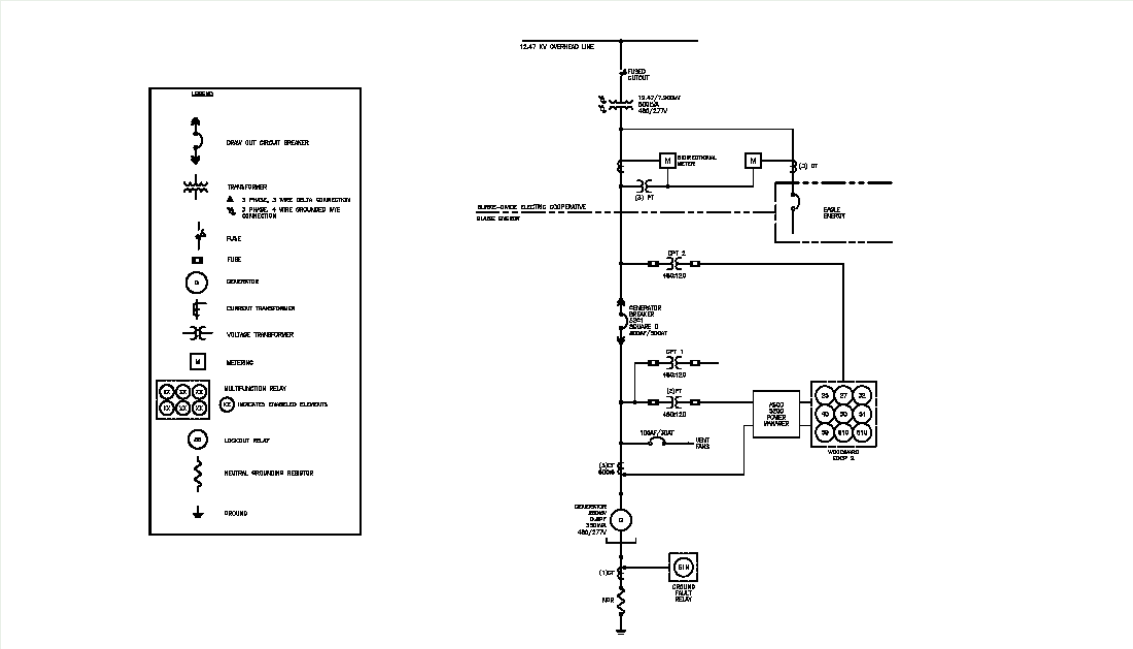

3.4. Gas P&ID

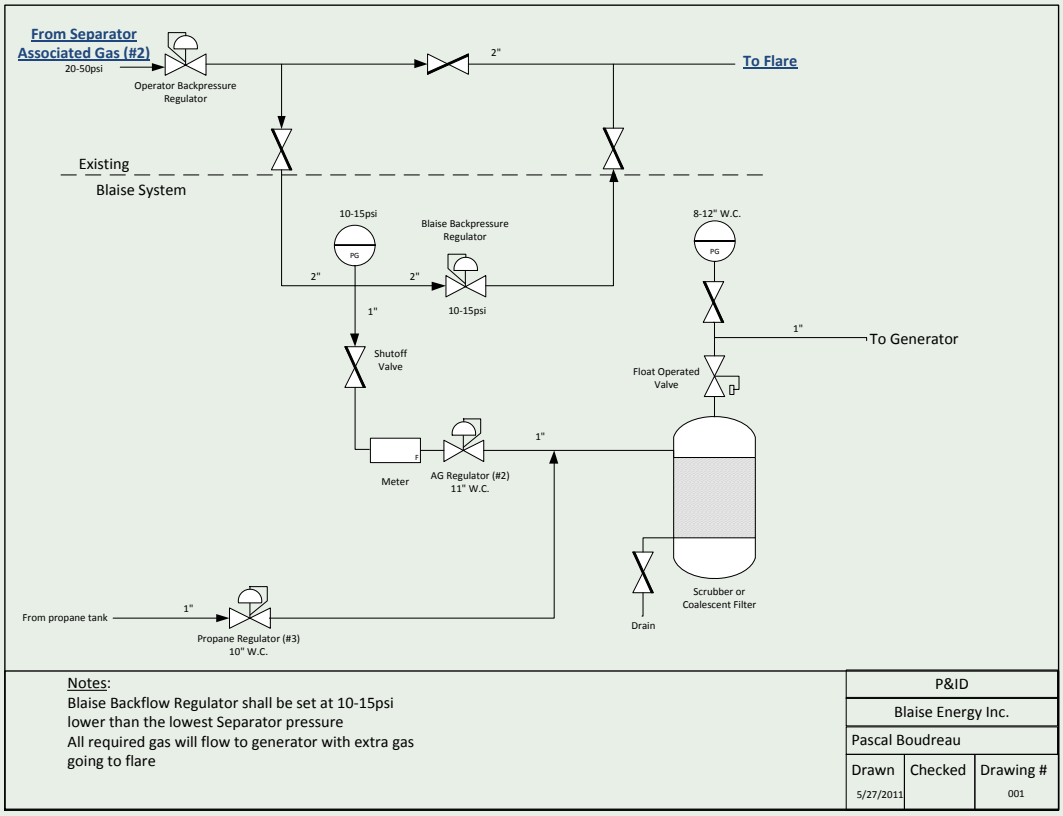

4. Project Description

This project consists of recycling the gas currently being flared and generating power back into Burke-Divide Electric Coop. All equipment will be in skid-mounted containers co-located at the flaring facility. A gas-line from the operator's handoff point to the Blaise equipment will be installed as well as electric interconnect equipment tying into the Burke-Divide electrical network. Containerized equipment will consist of a gen-set systems capable of generating 300 KW continuously. Gas conditioning will consist of ensuring the gas is dry. Control system for remote operations and monitoring will be included.

Figure 1: Equipment Block Diagram

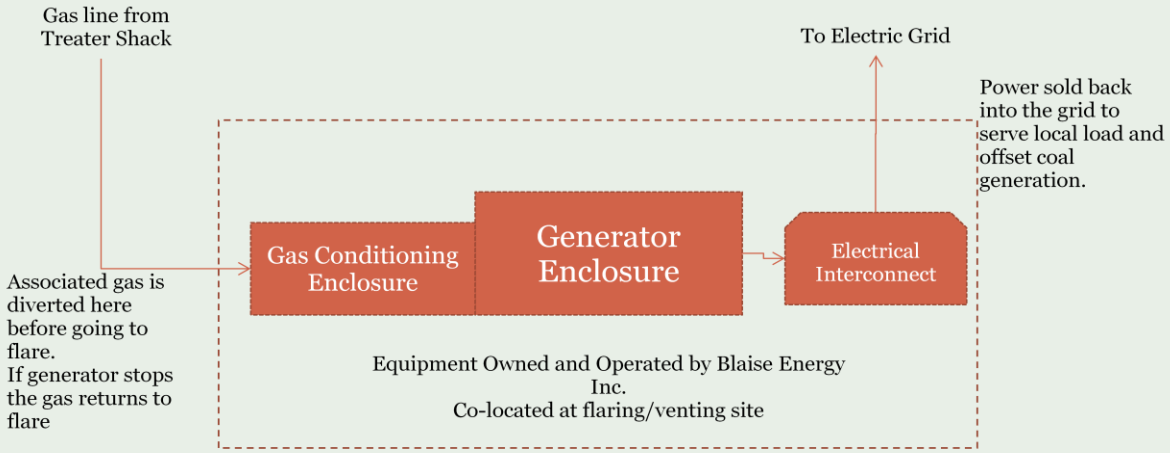

4.1. Equipment

310 KW natural gas generator

Output: 280KW continuous duty

Voltage: 480V, 3 phase, 60Hz

Sound attenuated enclosure

Inlet Filter

Exhaust muffler

Industrial switching gear

Container includes everything needed and requires simple gas and electrical connections which Blaise Energy takes care of. The operator does not need to do anything. Enclosure sits on well pad at the operators preferred location.

4.2. Electric Generation Decline

Generation decline due to normal gas production decline is expected.

Control System has been configured to generate as much as the fuel will allow and vary based on fuel supply. The control system is also configured to gracefully shutdown the generator then attempt to restart it 5 minutes later should the gas supply justify it. Supplemental propane ensures a graceful shutdown of the generator in instances where the associated gas is temporarily and instantly reduced to zero.

4.3. Emissions

The Blaise Solution provides an alternative to flaring and consumes the otherwise flared gas in a high-efficiency turbine that significantly reduces emission in comparison to flaring. The emission predictions in Table 1 are based on 300 KW of generation and can be scaled accordingly. The Blaise generation is also predictable and consistent therefore truly allowing the displacement of other sources of generation. In this case, coal generation is assumed to be the alternate source given that Basin Electric produces 93% of its power from coal. The Blaise generation is close to the load and therefore carried over local distribution lines; this helps to reduce transmission line traffic as well as line losses estimated at 7-10%. This line loss prevention is expected but not factored in our emission reduction calculations.

- North Dakota Emission Reductions

  Table 1 shows calculation results for the Blaise solution, the flaring alternative and the equivalent power generation currently servicing the load (assuming coal generation).

  The generation from the Blaise solution will displace other generation from Basin Electric which would otherwise serve the local load. This solution will allow the local utility and Basin Electric to address the local needs with environmentally friendly distributed generation co-located with the demand. This translates to the ability to serve their member's growing needs without increasing coal generation or requiring additional transmission line capacity; saving on line loss in the process.

BLAISE ENERGY

For North Dakota, the displacement of coal generation, recycling of a wasted resource, reduction of emissions in comparison to flaring, and benefits of distributed generation all contribute to state energy efficiency and environmental objectives.

This site has been approved by M-RETS as a qualifying "Recycled Energy" generating site and qualifies for Renewable Energy Credits (RECs). M-RETS will monitor and administer the RECs generated from this Blaise Generator. **This is the 1st "Recycled Energy" generation site of its kind in the United States.** (See M-RETS email for more information)

Table 1: Emissions Calculator for EPA

Turbine Generator set with Selective Catalytic Reduction (SCR) and inlet cooling

Generator size (KW)	300		
Heat Rate (Btu/KWh)	15600		
MMBtu per year	40996.8	MMBTU/hr	4.68
MWh generated per year	2628		
Input fuel H2S content (%)	0		

	Blaise Solution						Environmental Benefit to ND
	Generator Yearly Emissions		Flaring Emissions		Coal Power generation Equivalent		Combined benefit of Blaise Solution Yearly Reduction (Tons) using high load
Pollutant	All Loads (Tons)	High Loads (Tons)	Emission Factor (lb/MMBTU)	Yearly Emissions (Tons)	Emission Factor (lb/MMBTU)	Yearly Emissions (Tons)	
1,3-Butadiene	8.79E-06	8.79E-06					
Acetaldehyde	9.12E-04	8.24E-04					
Acetaldehyde							
Acrolein	1.70E-04	1.30E-04					
Acrolein							
Bensene	2.11E-03	2.42E-04					
Bensene							
Ethylbensene	5.29E-04	6.56E-04					
Formaldehyde	6.40E-02	1.45E-02					
Formaldehyde							
Naphthalene	2.81E-05	2.60E-05					
PAH	4.61E-05	4.57E-05					
Propylene Oxide	5.86E-04	5.86E-04					
Toluene	1.92E-03	2.75E-03					
Xylenes	1.12E-03	1.31E-03					
CO	3.63E+00	1.69E+00	3.00E-01	6.15E+00			4.46E+00
CO							
CO							
Methane	1.77E-01	1.77E-01					
NOx							
NOx							
NOx							
NOx	2.62E-01	2.62E-01	1.50E-01	3.07E+00	1.50E-01	3.07E+00	5.89E+00
PM Condendable	9.70E-02	9.70E-02					
PM Filterable	3.89E-02	3.89E-02					
PM Total	1.36E-01	1.36E-01					
SO2	6.93E-02	6.93E-02					
TOC	2.19E-01	2.19E-01					
VOC	4.22E-02	4.22E-02	6.99E-01	1.43E+01	2.38E-03	3.29E-02	1.43E+01
SO2	0.00E+00	0.00E+00	0.94S	0.00E+00	2.00E+00	2.76E-02	2.76E-02
CO2	2.25E+03	2.25E+03	1.50E+02	2.25E+03	2.40E+02	4.92E+03	4.92E+03

Emission Factors are pulled from EPA documents: AP42.

5. Budget

EM RICHARDSON 25-13H Associated Expenses	Appropriated Funds Share	Applicant's Share (Cash)	Applicant's Share (in-kind)	Line Totals	Actuals or Committed to date
Generation Equipment Total (300 KW)	**$138,000**	**$212,000**			
Generation Equipment	*$88,000*	*$62,000*		*$150,000*	*$130,798*
Gas Conditioning & Compression Equipment	*$20,000*	*$0*		*$20,000*	*$19,789*
Control Equipment	*$30,000*	*$0*		*$30,000*	*$30,000*
Maintenance (5 years) @ 15% per year		*$150,000*		*$150,000*	*$150,000*
Site Payment to Operator (5 years)	**$0**	**$65,700**		*$65,700*	*$61,320*
Site Prep - Total	**$100,000**	**$0**			
Legal	*$5,000*	*$0*		*$5,000*	*$5,000*
Gas line & labor	*$5,000*	*$0*		*$5,000*	*$4,923*
Other	*$5,000*	*$0*		*$5,000*	*$5,000*
Electric Equip	*$50,000*	*$0*		*$50,000*	*$15,000*
Electric Work	*$10,000*	*$0*		*$10,000*	*$5,558*
Electrical Studies and REC Administration	*$20,000*	*$0*		*$20,000*	*$5,000*
Environmental Consulting & Permits	*$5,000*	*$0*		*$5,000*	*$11,000*
Public Outreach	**$12,000**	**$0**			
Collateral and Data Collection	*$6,000*	*$0*		*$6,000*	*$0*
Workshops	*$6,000*	*$0*		*$6,000*	*$0*
Administration and Overhead Total (5 year)	**$0**	**$125,000**	**$125,000**	*$250,000*	*$50,000*
Site Totals:	**$250,000**	**$402,700**	**$125,000**		*$493,389*
Overall Total:	**$777,700**				
Blaise % Match	**67.85%**				

Some invoices are still coming in and will be added to Actuals in the next report.

Blaise Energy matching will be done through vendor financing, bank line of credit and sale of electricity cash flow.

6. Project Plan – Gantt Chart

		Task Name	Duration	Start	Finish	Predecessors	Resourc
3		finalize agreements	148 days	Tue 6/22/10	Thu 1/13/11		
4	✓	Site Lease Agreement	40 days	Tue 6/22/10	Mon 8/16/10	1,2	
5	✓	OGRC Agreement	1 day	Thu 9/9/10	Thu 9/9/10	4	
6		Interconnect Agreement	90 days	Fri 9/10/10	Thu 1/13/11	5	
7		Power Purchase Agreement	90 days	Fri 9/10/10	Thu 1/13/11	5	
8		Grant Deliverables	332 days	Tue 8/17/10	Wed 11/23/11		
9	✓	Grant Submission Deliverables	5 days	Tue 8/17/10	Mon 8/23/10	4	
10	✓	Project Aproval	10 days	Tue 8/24/10	Mon 9/6/10	9	
11		Workshops	5 days	Thu 11/10/11	Wed 11/16/11	36	
12		Final Report	5 days	Thu 11/17/11	Wed 11/23/11	11	
13		finalize design	76 days	Tue 8/17/10	Tue 11/30/10		
14	✓	gas pre-conditioning	5 days	Tue 8/17/10	Mon 8/23/10	4	
15	✓	gas piping	76 days	Tue 8/17/10	Tue 11/30/10	4	
16		electric interconnect	76 days	Tue 8/17/10	Tue 11/30/10	4	
17		permits	90 days	Fri 9/10/10	Thu 1/13/11		
18		WAPA Study	90 days	Fri 9/10/10	Thu 1/13/11	5	
19		Emissions	90 days	Fri 9/10/10	Thu 1/13/11	5	
20		Construction	90 days	Fri 9/10/10	Thu 1/13/11	5	
21		Equipment	37 days	Mon 12/27/10	Tue 2/15/11		
24		Site Preperation	174 days	Tue 6/22/10	Fri 2/18/11		
25	✓	Site visit	1 day	Tue 6/22/10	Tue 6/22/10	1	
26	✓	gen location selection	5 days	Tue 8/17/10	Mon 8/23/10	25,5	
27		Gas line	3 days	Wed 2/16/11	Fri 2/18/11	23	
28		Electric interconnect	3 days	Wed 2/16/11	Fri 2/18/11	23	
29		Installs	5 days	Mon 2/21/11	Fri 2/25/11		
30		Equipment install and commision	5 days	Mon 2/21/11	Fri 2/25/11	24	
31		Emission monitoring equip. install	1 day	Mon 2/21/11	Mon 2/21/11	24	
32		Remote monitoring equip. install	2 days	Mon 2/21/11	Tue 2/22/11	24	
33		grid interconnect	1 day	Mon 2/28/11	Mon 2/28/11	17,29,3	
34		full system testing	1 day	Tue 3/1/11	Tue 3/1/11	33	
35		operations handoff	1 day	Wed 3/2/11	Wed 3/2/11	34	
36		6 month operations	180 days	Thu 3/3/11	Wed 11/9/11	35	

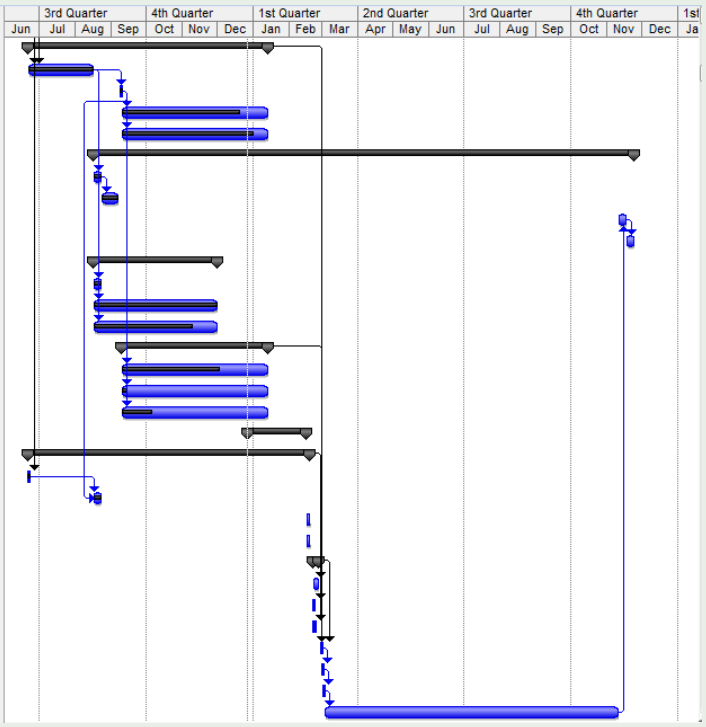

6.1. Project Milestones:

- Connection to the grid targeted for March 18th, 2011
- **Permanent connection to the grid was made on June 24th, 2011**

7. Conclusion

7.1. Efficiency Metrics

- 38 Billion BTU per year recycled
- 49 million BTU recycled per year per $1000 budgeted
- 152 million BTU recycled per year per $1000 of grant funding

Blaise Energy Inc. is working with operators and offering an alternative to flaring/venting. The Blaise Solution has a very positive impact on the environment due to its unique combination of recycling an otherwise wasted resource and reducing emissions from two sources in the process (flaring and coal-fueled power plants).