EERC
Energy & Environmental Research Center®
Putting Research into Practice

University of North Dakota
15 North 23rd Street, Stop 9018 • Grand Forks, ND 58202-9018 • P. 701.777.5000 • F. 701.777.5181
www.undeerc.org

October 1, 2015

Ms. Karlene Fine
Executive Director
ATTN: Lignite Research Program
North Dakota Industrial Commission
State Capitol, 14th Floor
600 East Boulevard Avenue, Department 405
Bismarck, ND 58505-0840

Dear Ms. Fine:

Subject: EERC Proposal No. 2016-0037 Entitled "Pathway to Low-Carbon Lignite Utilization"

The Energy & Environmental Research Center (EERC) of the University of North Dakota is pleased to submit an original and one copy of the subject proposal in partnership with 8 Rivers Capital, LLC; ALLETE, Inc.; and Basin Electric Power Cooperative. In addition to the $100 application fee, you will find an application soliciting your support of the research and development efforts required at the early stages of the larger effort to commercialize a transformational technology, potentially revolutionizing the use of lignite. The EERC is committed to coordinating the team effort and ensuring completion of the project as described in the proposal. Support from the Commission is imperative in the development of new technologies securing the future use of lignite in our state.

If you have any questions, please contact me by telephone at (701) 777-5276 or by e-mail at mholmes@undeerc.org.

Sincerely,

Jason Laumb
for Michael J. Holmes
Director of Energy Systems Development

Approved by:

Erin M. O'Leary
for Thomas A. Erickson, CEO
Energy & Environmental Research Center

MJH/bjr

Enclosures

UND THE UNIVERSITY OF NORTH DAKOTA

Lignite Research, Development and Marketing Program

North Dakota Industrial Commission

Application

Project Title: Pathway to Low-Carbon Lignite Utilization

Applicant: University of North Dakota Energy & Environmental Research Center

Principal Investigator: Michael J. Holmes

Date of Application: October 1, 2015

Amount of Request: $1,480,000

Total Amount of Proposed Project: $3,180,000

Duration of Project: 12 months

Point of Contact (POC): Michael J. Holmes

POC Telephone: (701) 777-5276

POC Email: mholmes@undeerc.org

POC Address: 15 North 23rd Street, Stop 9018

Grand Forks, ND 58202-9018

TABLE OF CONTENTS

Abstract	**4**
Project Summary	**5**
Project Description	**6**
Standards of Success	**14**
Background	**15**
Qualifications	**20**
Value to North Dakota	**23**
Management	**24**
Timetable and Deliverables	**25**
Budget	**26**
Matching Funds	**26**
Tax Liability	**28**
Manufacturing Wavier Requirements	**28**
Confidential Information	**28**
Patents/Rights to Technical Data	**29**
Resumes of Key Personnel	**Appendix A**
Description of Equipment	**Appendix B**
Letters of Support and Letters of Commitment	**Appendix C**
Budget Justification	**Appendix D**
References	**Appendix E**
Oxy-Lignite Syngas Fueled Semi-Closed Brayton Cycle Process Evaluation Report	**Appendix F**

ABSTRACT

Objective: The Allam Cycle is a novel power generation cycle that uses supercritical CO_2 as the working fluid in the turbine, eliminating the traditional energy penalty associated with vaporization of water. The team leading this project has been working through early stages of development of the Allam Cycle for 3 years, including through a North Dakota Industrial Commission (NDIC) grant to complete an initial feasibility study on the technology and parallel development work on the Allam Cycle fueled with natural gas. This initial grant culminated in a final report delivered to NDIC and the Lignite Research Council (LRC) in February 2014 which concluded that the technology holds promise for the lignite industry but that further development work is needed on key aspects of the cycle before any pilot or commercial application is pursued. This proposed effort will build off of past work led by the industrial partners and current work under way by 8 Rivers Capital, LLC (8 Rivers) to overcome the barriers presented when fueling the Allam Cycle with North Dakota lignite. This lignite design needs further development to assess the challenges of operating key equipment in a syngas environment and to identify the best gasifier and combustor design to support the power cycle on North Dakota lignite.

Expected Results: The knowledge gained from the development of the natural gas-fueled Allam Cycle will aid in designing to overcome barriers presented when fueling the Allam Cycle with North Dakota lignite. Expected results include identifying the best gasifier, materials of construction, impurity removal systems, and syngas combustor design, all for the lignite-fueled case.

Duration: The duration of the proposed project is 12 months (December 1, 2015, to November 30, 2016).

Total Project Cost: The total estimated cost of the proposed project is $3,180,000. The Energy & Environmental Research Center (EERC) is requesting $1,480,000 from the state through NDIC.

Participants: Participants are the EERC; the U.S. Department of Energy, NDIC through LRC and the Lignite Energy Council; Basin Electric Power Cooperative, ALLETE, Inc.; and 8 Rivers.

PROJECT SUMMARY

A unique and experienced team of key partners has come together to continue the development of a lignite-based Allam Cycle. The team brings together the industry expertise of North Dakota lignite owners and users, the research expertise of the premier North Dakota lignite and CO_2 technology development organization, and the technology expertise of the technology owner and developer. The team consisting of the Energy & Environmental Research Center (EERC), 8 Rivers Capital, LLC (8 Rivers) and the North Dakota Industrial Commission (NDIC) Lignite Energy Council (LEC) is proposing to develop a lignite-based Allam Cycle in support of an industry team comprised of ALLETE, Inc., and Basin Electric Power Cooperative (BEPC). The proposed effort will build off of a road map for the development of high-efficiency advanced coal cycles, which focuses on the Allam Cycle technology as the most fully developed to date. This road map was recently created by the project team research leads for LEC. Key barriers identified in the road map for the lignite-based system requiring further research and development include corrosion, impurity management, gasifier selection, and syngas combustor design. This specific project work is a key step on the path to develop the revolutionary technology. While the end goal is focused on the development of a mature lignite-based Allam Cycle, the work identified during this phase can largely be applied to other supercritical CO_2 (sCO_2) power cycles.

The project matches NDIC Lignite Research Council (LRC) goals through the promotion of efficient and clean use of lignite in order to maintain and enhance development of North Dakota lignite. The ultimate development and application of generation technology for this power system would preserve jobs and create new jobs involved in the production and utilization of North Dakota lignite. Additionally, the technology would ensure economic stability and future growth in the lignite industry through continued improved efficiency and production of captured CO_2 as a salable product. Funding for the proposed effort will come from state, industry, and federal sources.

The total estimated cost of the proposed project is $3,180,000. The EERC is requesting $1,480,000 from the state through the NDIC LEC. The EERC anticipates matching this funding with existing federal

sponsorship in the amount of $900,000 from DOE, which has already been awarded through Agreement No. DE-FE0024233, and $125,000 each from the industrial partners ALLETE and BEPC. In addition, the industrial partners will provide $25,000 each in the form of in-kind services, and the technology owner and developer, 8 Rivers, will provide $500,000 in the form of in-kind contributions.

PROJECT DESCRIPTION

Objectives: This proposed effort will build off of past and current work conducted by the industrial partners and 8 Rivers to overcome barriers presented when fueling the Allam Cycle with North Dakota lignite. A copy of the report for this work can be found in Appendix F. A design utilizing lignite is more complex than a design fueled with natural gas and requires additional equipment within the power system, including a coal gasifier. The proposed lignite-based design needs further development to assess the challenges of integration of the system components and to identify key risks of the design. Project objectives will focus on the development of a North Dakota lignite-fueled power system. Specific needs are to identify the best gasifier, materials of construction, impurity removal systems, and syngas combustor design as well as other key challenges to further development.

Methodology: The ultimate goal of the proposed project is to address barriers (as identified in the Allam Cycle technology road map developed for LEC) and develop knowledge that will support the deployment of commercially viable low-carbon power generation technologies for the next generation of coal-fired power plants. To achieve that goal, the EERC will conduct a series of evaluations of coal gasifiers, impurity removal technologies, and materials properties and perform laboratory, pilot, and modeling activities focused on promising options. In order to meet the goals of this project, the following are key objectives:

- Identify potential gasification technologies to support the Allam Cycle with North Dakota lignite.

- Determine potential corrosion challenges, and identify material selection in key areas associated with the Allam Cycle.
- Consider syngas combustor designs and integration.
- Identify economically viable near-commercial technologies to support the removal of impurities, both pre- and postcombustion.
- Determine next steps required for continued cycle development and further progress on the development road map based on the outcome of these efforts.

In order to meet the goals and objectives of the project, five tasks have been identified.

Task 1 – Corrosion Study. The results of the corrosion study have the potential to have a great impact on overall system design. There are concerns regarding the ability of heat exchanger materials to withstand a strongly acidic and corrosive environment if sulfur, nitrogen, chlorine, and other species are left in the syngas prior to combustion. Removal of these impurities after the heat exchanger presents an opportunity to improve overall system efficiency and cost. Precombustion removal is a standard commercially available process that will provide high system reliability, but overall system efficiency may be reduced.

The corrosion study will be divided into two activities. First, several materials specified by 8 Rivers and the EERC will be screened over a short duration using static testing in CO_2–water environments with and without sulfur, nitrogen, and other contaminants. The EERC will conduct three separate long-duration corrosion tests using selected metallic materials in a 2-gallon autoclave. These tests will consist of loading preweighed, photographed, and surface-analyzed coupons in a water bath. The water bath will contain selected concentrations of O_2, CO_2, SO_2, NO_x, and HCl. These tests will expose the coupons at two different temperatures with the same gas composition to examine the effects of temperature on corrosion while operating at a constant pressure (approximately 30 bar). In addition, a long-duration test will be performed with the trace acid gas compositions reduced in a stream with a high CO_2 concentration. The long-duration test will be conducted at the temperature that exhibited the highest

corrosion rate with the acid gas species. This test will aid in determining the effect of trace acid gas impurities in the presence of condensed water and also establish the baseline corrosion rate for a carbonic acid solution.

Scanning electron microscopy, energy-dispersive spectrometry, and cross-sectional analysis will be performed on the coupons to gain a preliminary understanding of the mechanisms of corrosion. The results will help to move toward an understanding of the required impurity removal process, guide in the selection of recommended materials, and help determine corrosion management strategies. This initial screening technique will be used to down-select to a manageable number of candidate materials that merit further evaluation in a dynamic testing environment. In addition, the project team will work to identify the best partner to evaluate the candidate materials as part of subsequent efforts.

The outcome of Task 1 will be a section in the final report summarizing the work completed, lessons learned to steer subsequent testing, final results, and recommendations regarding material selection for key area(s) of the sCO_2 cycle. Problem impurities confirmed or identified in Task 1 are interrelated to Task 3 – Impurity Removal.

Task 2 – Gasifier Selection and Syngas Stability. Gasifier selection is of critical importance to successful deployment of Allam Cycle technology for lignite-derived syngas. Initial studies have been completed to evaluate the potential efficiency of each gasification system with lignite. The team has agreed that fuel specifications will be based on input from the North Dakota sponsors. Fuel selection may consist of a single North Dakota lignite with known compositional ranges or a series of fuels that represent a specific range of properties. The tighter the compositional range, the more certain the gasifier selection.

The EERC will lead the gasifier selection effort. First, a short list of gasification technologies will be developed based on work completed to date by 8 Rivers and EERC experience with testing the performance of lignite coal with various gasifier technologies. Key vendor data will then be gathered for

the short list of technologies that will enable their detailed evaluations of the short-listed technologies. The data will be gathered through existing relationships of 8 Rivers and the EERC with the manufacturers of various commercial gasifier systems.

Specifications and the composition of syngas derived from the various technologies will be compiled and used to determine design needs for the combustion system. Expected compositional variations will need to be known in order to adequately design the combustion system for stable operation. Gasifier selection is interrelated to Task 3 – Impurity Removal and Task 4 – Syngas Combustion.

Of the many considerations to be addressed, the issues with full quench versus partial quench and syngas cooler system design need to be considered as part of this task. The major gasification vendors typically offer direct quench options as well as heat recovery options through steam generation. The EERC is also currently developing a quench technology, and although development is in the early stage, it may be a good fit for this application. The team needs to weigh operational stability with direct quench design versus improved efficiency with heat recovery and capital costs. Input from gasifier vendors will also be important for design decisions and capital cost considerations. Syngas cooler fouling is heavily dependent on the composition of the fuel; therefore, fuel selection will be of critical importance in determining quench selection.

Heat recovery integration of the gasification system with the sCO_2 cycle is of critical importance in successful technology development. Integrated heat recovery increases overall system efficiency, thereby directly reducing the cost of electricity. The EERC will work with 8 Rivers to determine the best options for heat integration. Gasifier design and quench selection will be essential design parameters for the heat integration study.

Process optimization and performance modeling will be undertaken by 8 Rivers and the EERC to support down-selection of suitable gasifiers based on the integrated design. A front-running gasifier

technology will be selected as a deliverable of this project. However, as the project moves forward in subsequent phases, other technologies may be considered as a result of further impurity, corrosion, or cost challenges.

Task 3 – Impurity Removal. The results of the corrosion study will feed directly into the impurity removal study. If heat exchanger materials can withstand CO_2 containing high levels of sulfur, NO_x, and other trace species, then postcombustion impurity removal technologies will likely be considered. If critical materials challenges are encountered, then studies will focus on commercially available precombustion processes (such as Rectisol® and Selexol™), with considerations also made for cutting-edge technologies including the near-commercial-ready Research Triangle Institute (RTI) process. Other technologies may need to be considered for the removal of trace contaminant such as Hg and As.

The EERC will conduct 4 to 5 weeks of testing utilizing its existing equipment to validate various impurity removal concepts. A gasification–combustion system combined with a gas-sweetening column can be used to test both pre- and postcombustion removal processes. This system was designed for a Selexol-type solvent in a packed column but was built to be versatile enough to handle a wide range of other solvents. For precombustion cleanup testing, the unit will be utilized to demonstrate the use of the gas-sweetening solvent to remove the H_2S and other trace acid gases and trace metals. The amount of CO_2 removed by the solvent will be minimized while optimizing for the overall economics of the process (including sulfur end product and life-cycle analysis). If the team decides to move forward with evaluation of postcombustion processes, the EERC can utilize existing equipment to test removal concepts and prove the ability to remove both sulfur and NO_x species as well as trace contaminants.

For postcombustion cleanup testing, high-pressure flue gas will be generated by operating the EERC's fluid-bed gasifier (Appendix B) as an oxygen-fired fluid-bed combustor. This system is designed for operating as an oxygen-blown fluid-bed gasifer with a recycle loop to allow different fluidization velocities, independent of any desired oxygen and steam-to-fuel ratio. This same gas recycle capability

will allow for the recycle of high-concentration-CO_2-laden flue gas to the system, producing a coal-derived flue gas enriched in CO_2, with little nitrogen content. The postcombustion absorption unit will be tested at various temperatures, pressures, and liquid and flue gas flow rates as well as varying amounts of makeup water/solvent and saturated water/solvent being discharged from the process to determine a performance envelope for the particular postcombustion control process.

During the evaluation of postcombustion technologies, where the contacting solvent fluid is water, the intent is to closely look primarily at the effects of operating pressure and inlet concentrations on the removal efficiencies of SO_2, NO_x, and possibly other trace acid gas impurities such as HCl and other volatile trace metals such as arsenic, selenium, mercury, and cadmium or nickel. Testing will involve utilizing a set of flue gas analyzers around the inlet and outlet of the postcombustion test system for measuring SO_2 and NO_x reductions while also analyzing trace metals. In addition, the absorber water will be analyzed for these same trace metals as well as sulfuric and nitric acid anions to help determine the collection efficiency of the absorption water/solvent. The flash drum gas flow and composition will also be measured to determine how much CO_2 was dissolved in the water/solvent. The test campaigns will utilize fuels that fall within the specifications provided by the sponsors. Additional testing is planned for evaluating at a sulfur-scrubbing solvent such as the Shell Cansolv process to determine how it may perform at elevated pressures. Other absorption solvents also may be considered. Trace metal removal will also be measured around this absorption solvent.

Of additional importance will be understanding the potential for buildup of trace species in the recycle system. Trace elements have the potential to build up over time if they are not removed in a control process. Coal contains dozens of species that could remain in the system through the turbine and end up in the recycle loop. The EERC will undertake experimental design of the testing programs. Kinetic modeling activities based on the empirical data from the above tests will be performed by the EERC. The kinetic data will then be used by 8 Rivers to update its full system model to evaluate the buildup of impurities.

Task 4 – Syngas Combustion. Development of the syngas combustor is considered to be a key element for a successful Allam Cycle coal development program. The syngas combustor design will build off of an existing effort led by 8 Rivers for design of a natural gas combustor. Design of the syngas combustor is dependent on the outcomes of the aforementioned studies.

8 Rivers will competitively source an appropriate partner with specialized experience in combustor design to support design and simulation of the combustor. The EERC will support definition of design specifications based on results of other studies as well as provide input to the testing program. The EERC will provide the pertinent design information, including gas composition, variation, and concentration of various impurities. The EERC will also work with 8 Rivers to evaluate the potential to host the pilot-scale syngas combustor demonstration in EERC facilities, taking advantage of existing infrastructure. Task 4 will provide critical information for the next phase of the design of the commercial-scale combustion system.

Task 5 – Management and Reporting. The planning, management, and reporting of project tasks will be conducted by EERC personnel for the duration of the proposed period of performance. Task 5 will also include a focus on project coordination to ensure results from each of the technical activities are used as inputs and to guide all other project activities. Specific activities to be conducted under Task 5 include the preparation of quarterly progress reports according to sponsor requirements, the preparation of a comprehensive project final report, and the planning and execution of project status meetings for project partners. Technology transfer activities will include, at a minimum, the presentation of results at relevant technical conferences and meetings with project partners. In addition, an advisory committee will be formed comprising the industry partners, LEC, and DOE, and input from committee members will help to guide the technical project activities and maintain the commercial focus. This program will be executed by the EERC and 8 Rivers on behalf of the industry team led by ALLETE and BEPC.

Anticipated Results: The barriers of gasifier selection, corrosion management, impurity removal, and syngas combustor design will be addressed as they apply to a lignite-fueled Allam Cycle. Expected results include selecting the best gasifier, materials of construction, impurity removal systems, and syngas combustor design, all for the lignite-fueled case. The technology road map will be refined and updated to guide subsequent efforts to commercialize the technology.

Facilities: A description of the EERC facilities to be used for the work under Task 1 and Task 2 can be found in Appendix B. The modeling activities will be performed at the EERC and 8 Rivers with existing computing facilities.

Resources: The analyses will be performed by a team of industry experts, with the primary services being provided by the EERC and 8 Rivers, utilizing their existing research facilities, modeling software, electric generation experience, and coal gasification expertise. Additional project advisory services will be provided in kind by industry sponsors ALLETE and BEPC.

Techniques to Be Used, Their Availability, and Capability: This study will build off of previous modeling work performed by the project team and ongoing assessments for a natural gas case. Additional empirical data on corrosion and impurity removal will also enhance the development of new models for the lignite case. The EERC and 8 Rivers will utilize Aspen software as the main modeling tool. Aspen software has modules to evaluate economics, kinetics, and heat and material balances for complex processes.

Environmental and Economic Impacts while Project Is under Way: The proposed project will have minimal environmental impact as it is contained within existing permitted facilities while simultaneously supporting development of technology to improve efficiency and minimize emissions. The bulk of funding for this program will be spent in North Dakota, thereby having an immediate economic impact. The project has strong potential to support future growth of the lignite industry in North Dakota, which currently has a $3 billion economic impact on the state.

Ultimate Technological and Economic Impacts: The project will result in furthering the development of a promising clean coal generation technology, which is needed to maintain and grow the $3 billion lignite production and utilization industries in North Dakota. Development of a generation technology that could operate at substantially higher system efficiencies than current coal-based generation would not only allow for a more economical system but also result in production of fewer ultimate emissions. Coupled with the fact that the technology offers no atmospheric air emissions and low water usage, the technological and economic impacts of furthering this technology development for North Dakota lignite are substantial.

Why the Project Is Needed: The project is needed to provide additional pathways for the future use of North Dakota lignite and to provide alternative options for clean coal electric generation using North Dakota lignite.

The project also furthers the objectives of NDIC and the goals of LRC by:

1) Promoting economical, efficient, and clean uses of lignite, and maintaining and enhancing development of North Dakota lignite utilization.
2) Preserving and potentially creating jobs in the production and utilization of North Dakota lignite.
3) Ensuring economic stability and growth through further future utilization of North Dakota lignite for electric generation.

STANDARDS OF SUCCESS

Successfully addressing barriers to the development of a sCO_2 cycle such as the Allam Cycle fueled with lignite will result in scale-up to a pilot-scale system. The EERC will work closely with project partners after conclusion of a successful project to address work on the detailed design of the pilot-scale system. The project partners will be working to develop the specific details of the continued technology development and commercialization plan and will identify the technical challenges for lignite application

in subsequent work. The expertise provided by the project participants will enable successful scale-up of the Allam Cycle technology in subsequent activities. The testing performed in this program will enable the project team to consider future options for this technology.

BACKGROUND

The Allam Cycle is a sCO_2 power generation cycle that operates with a high-pressure, oxy-fuel combustor burning gaseous fuel. The process is designed for utility-scale power generation, with "first-generation" turbines producing ~300 MW_e from each train. Combustion creates a CO_2-rich (>90%) working fluid that operates in a semiclosed loop, high-pressure, low-pressure-ratio Brayton cycle. This working fluid is expanded through a single compact turbine operating with an inlet pressure of approximately 300 bar and inlet temperature of <1200°C. The turbine exhaust flow, at 30 bar pressure, is cooled to below 70°C by the economizer heat exchanger and then further cooled to atmospheric temperature using standard cooling towers. This enables liquid water derived from fuel combustion to be separated. The remaining stream of predominantly CO_2 is compressed and pumped to the required high pressure and reheated in the economizer heat exchanger for return to the combustor in order to dilute the combustion products and lower the turbine inlet temperature to the necessary level. The energy required to raise the pressure of the CO_2 from 30 to 300 bar is minimized by first compressing to above the critical point, thereby forming a dense-phase fluid that can then be more efficiently pumped to 300 bar. This cycle is extremely simple and able to achieve high efficiency on natural gas (59% lower heating value [LHV]) and low cost by eliminating the steam cycle and associated turbines, boilers, heat recovery steam generators (HRSGs), and required piping. The Allam Cycle also inherently captures the CO_2 generated by combustion without additional capture or compression equipment or energy losses. Simplified process diagrams are depicted in Figure 1. More detailed information on cycle operation has been published in various publications (Allam et al., 2013a, 2014).

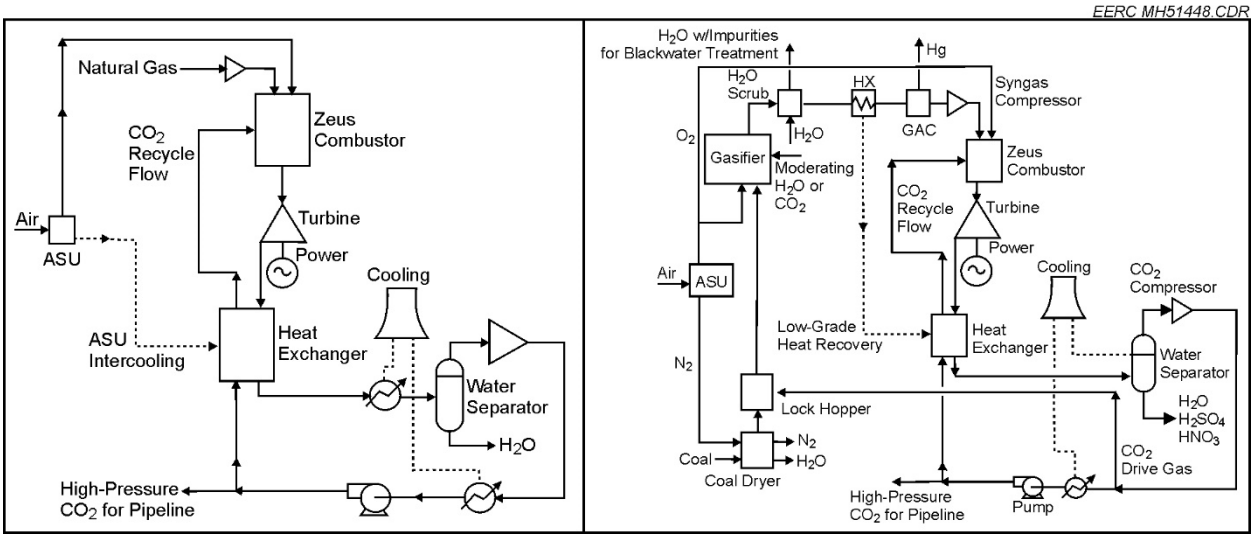

Figure 1. Simplified flow sheets of the natural gas Allam Cycle (left) and the coal-based Allam Cycle (right).

The Allam Cycle system has undergone significant development since its invention to reduce technology risk (Allam et al., 2010, 2012). Additionally, although it is a novel cycle, most components of the system can be found in commercial use at the required duty. The primary exception is the combustor and turbine, which have been under development by Toshiba since 2012 (Toshiba, 2012). The turbine operates at 300 bar, which is within typical pressures seen in conventional steam turbines, and at temperatures <1200°C, which is below temperatures seen in conventional gas turbines. The turbine has been operating on a natural gas combustor test rig since January 2013 at the full conditions (pressure, flow, temperatures, and stream compositions) experienced in the Allam Cycle. The turbine will be further tested at full operating conditions beginning in 2017 as part of a 25-MW electric natural gas-fired demonstration program (NET Power, 2014).

The coal-based Allam Cycle has the advantage of utilizing the basic process described above, along with its associated cost and performance benefits, but with a coal-derived syngas fuel generated by a coal gasifier. Similar to a conventional integrated gasification combined cycle (IGCC) plant, this entails coal-processing equipment, a gasifier, and additional processes for removal and treatment of coal-related

impurities. Three advantageous aspects of the coal-based Allam Cycle that require special consideration when designing optimum system integration are the following:

- Potential high gross efficiency of the base Allam Cycle enables the use of quench-type gasifiers instead of gasifiers with syngas coolers that are often required by IGCC systems to boost overall efficiency. Quench-type gasifiers are widely deployed in the petrochemical industry and provide greater process simplification with a corresponding reduction in capital cost, higher reliability by avoiding the potential for deposition and plugging in syngas coolers due to condensation of contaminants, and the well-proven ability to scrub the syngas to high purity levels.
- The unique conditions of the CO_2 working fluid are well-suited for more simplified cleanup of SO_x and NO_x impurities instead of the large precombustion scrubbing plants typically used by IGCC plants. These simplified processes have been studied for use in oxycombustion cycles where oxidized SO_x and NO_x species are present in addition to excess O_2 and liquid H_2O at higher pressure (>15 bar) (Murciano et al., 2011). Adaptation of this technology would further increase system simplicity and flexibility and reduce overall costs.
- Since the working fluid is sCO_2, it is desirable for the CO to remain in the fuel syngas; thus there is no need for modification of the $CO:H_2$ ratio (via a water-gas shift [WGS] reaction) to favor production of H_2. Eliminating the need for a WGS reaction increases the total energy yield in the coal-to-syngas process, thereby reducing fuel consumption.

The coal-based Allam Cycle has been the subject of several feasibility, design, and academic analyses that provide a sound understanding of anticipated cost and performance of the cycle when integrated with various commercial gasification and cleanup systems (Allam et al., 2013b,c [Appendix F]; Forrest et al., 2015). This work has shown that the system can perform with a baseload efficiency of up to 52% LHV utilizing commercially available gasification systems and with full carbon capture. This concept is a large improvement over new advanced ultrasupercritical pulverized coal (USCPC) at 40%

LHV and IGCC at 42% LHV, each of which operates without carbon capture (efficiency of these systems is significantly lower with carbon capture) (Parsons Brinckerhoff, 2013). Furthermore, the coal-based Allam Cycle has been found to achieve large capital cost savings. The cost and performance benefits of the Allam Cycle over existing USCPC and IGCC systems are even more substantial when costly carbon capture systems are considered for those legacy systems.

Coal Gasification Fundamentals: The coal gasifier is a critical component of the coal-based Allam Cycle. Coal gasification is a process in which coal is reacted with steam and oxygen at temperature and pressure to form H_2 and CO. Pressures can range from atmospheric to 1200 psi, and temperatures can range from about 1200° to over 2900°F. In addition to the typically desired products, H_2 and CO, many other by-products are formed during gasification such as CO_2, CH_4, H_2S, COS, HCl, NH_3, higher hydrocarbons, tars and oils, and particulate matter. The biggest challenge with any gasification system is dealing with the inorganic components in the coal and matching gasifier design to fuel-specific properties and desired end products. The use of lignite in a gasifier can create additional challenges with high moisture and sodium in the ash. Gasifiers are typically configured as fixed beds, fluidized beds, moving beds, or entrained flow. Each gasifier type has strengths and weaknesses depending on the fuel used and the desired end products. Gasifier selection depends on both the application and coal characteristics.

Gas Cleanup Fundamentals: Conventionally, cold-gas cleanup methods have been employed to remove contaminants from coal gasification syngas streams. Methods such as Rectisol or Selexol are commercially available and highly effective at removing contaminants but are also very costly from a capital and operational perspective. Economic benefits can be realized by utilizing warm- or hot-gas cleaning techniques. DOE has stated that thermal efficiency increases of 8% over conventional techniques can be realized by integrating warm-gas cleanup (WGCU) technologies into IGCC plants (Klara, 2006).

Work has been performed at the EERC in conjunction with DOE to develop methods to remove contaminants from syngas to low levels. The WGCU train is capable of removing sulfur, particulate,

chlorine, and trace metals including mercury at temperatures above 400°F. All of the technologies utilized are considered either commercial or near-commercial in development. One such test involved gasification of Texas lignite in the EERC's transport reactor development unit (TRDU), with a slipstream of gas being sent to the WGCU train (Stanislowski and Laumb, 2009). Figure 2 shows the test setup and a sampling of the results from the test.

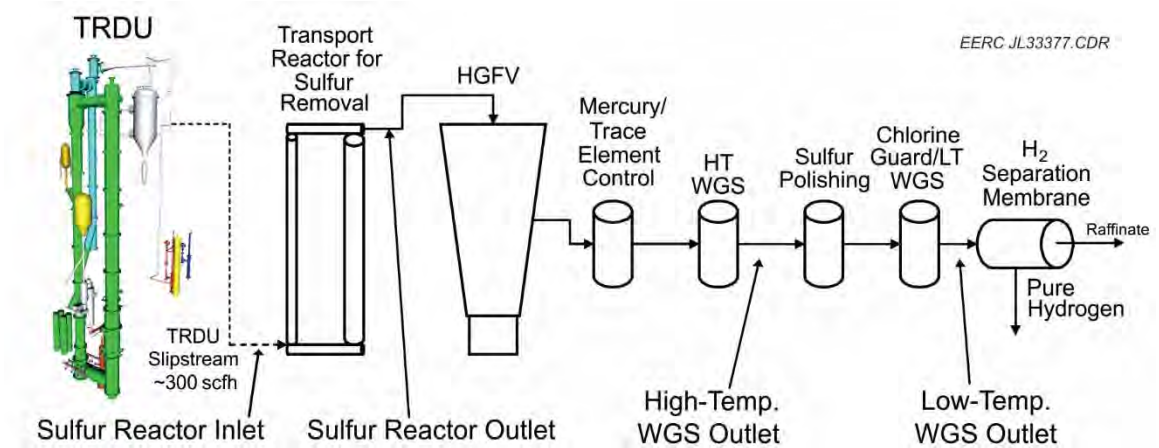

Component	Concentration	Unit
H_2	8.3	%
CO	4.8	%
CO_2	15.0	%
N_2	69.1	%
CH_4	1.7	%
H_2S	3455	ppm
H_2/CO	1.7	ratio

Component	Concentration	Unit
H_2	7.7	%
CO	4.4	%
CO_2	13.8	%
N_2	72.3	%
CH_4	1.5	%
H_2S	4.4	ppm
H_2/CO	1.8	ratio

Component	Concentration	Unit
H_2	10.9	%
CO	1.0	%
CO_2	16.7	%
N_2	68.6	%
CH_4	1.5	%
H_2S	3.0	ppm
H_2/CO	11.0	ratio

Component	Concentration	Unit
H_2	13.3	%
CO	0.1	%
CO_2	18.4	%
N_2	65.5	%
CH_4	1.6	%
H_2S	0	ppm
H_2/CO	98.3	ratio

Figure 2. Gasification and gas cleanup process diagram with test results (Stanislowski and Laumb, 2009).

Sulfur in the form of hydrogen sulfide and carbonyl sulfide was removed in a transport-style gas–solid contactor at temperatures between 600° and 1000°F. The system was capable of reducing sulfur to single-digit ppm levels in the syngas. Particulate was removed in a hot-gas filter vessel (HGFV) that provided near-absolute filtration using candle filters. Mercury and trace elements were removed with a proprietary sorbent. A high-temperature WGS catalyst significantly increased the hydrogen concentration in the gas stream while reducing CO. A sulfur-polishing bed removed hydrogen sulfide to concentrations below 0.2 ppm. A chlorine guard bed was used in front of the low-temperature WGS catalyst to prevent

poisoning. Carbon monoxide was reduced to 0.1% in a low-temperature shift bed, and hydrogen was maximized. If the system were run under oxygen-fired conditions, the resulting syngas would contain combined H_2 and CO_2 levels greater than 90%.

QUALIFICATIONS

EERC Team: The EERC is one of the world's major energy and environmental research organizations. Since its founding in 1949, the EERC has conducted research, testing, and evaluation of fuels, combustion and gasification technologies, emission control technologies, ash use and disposal, analytical methods, groundwater, waste-to-energy systems, and advanced environmental control systems. Today's energy and environmental research needs typically require the expertise of a total-systems team that can focus on technical details while retaining a broad perspective.

Mr. Michael Holmes, the Director of Energy Systems Development at the EERC, will be the principal investigator and will be the lead on Task 5 – Project Management. Mr. Holmes currently oversees fossil energy research areas at the EERC, including coproduction of hydrogen, fuels, and chemicals with electricity in gasification systems; advanced energy systems; emission control technology projects involving mercury, SO_2, NO_x, H_2S, and particulate; and CO_2 capture technology projects. Mr. Holmes's principal areas of interest and expertise include CO_2 capture; fuel processing; gasification systems for coproduction of hydrogen, fuels, and chemicals with electricity; process development and economics for advanced energy systems; and emission control (air toxics, SO_2, NO_x, H_2S, and particulate technologies). He has managed numerous large-scale projects in these areas. Mr. Holmes has an M.S. degree in Chemical Engineering and a B.S. degree in Chemistry and has 29 years of experience in research and project management.

Mr. John Kay, Principal Engineer for Emissions and CO_2 Capture at the EERC, will serve as the lead for Task 1 – Corrosion Study. Mr. Kay manages bench-, pilot-, and demonstration-scale postcombustion CO_2 separation equipment used for technology development activities. His work also

includes the development of cleanup systems to remove SO_x, NO_x, particulate, and trace elements to render flue gas clean enough for separation. Mr. Kay has a B.S. degree in Geological Engineering and has performed and/or managed laboratory research projects for 23 years.

Mr. Jason Laumb, Principal Engineer for Coal Utilization at the EERC, will serve as a lead for Task 3 – Impurity Removal. Mr. Laumb leads a multidisciplinary team of scientists and engineers whose aim is to develop and conduct projects and programs related to power plant performance, environmental control systems, the fate of pollutants, CO_2 capture/sequestration, computer modeling, and health issues for clients worldwide. Efforts are focused on the development of multiclient, jointly sponsored centers or consortia that are funded by government and industry sources. Current research activities include computer modeling of combustion/gasification and environmental control systems, use of selective catalytic reduction (SCR) technologies for NO_x control, mercury control technologies, hydrogen production from coal, CO_2 capture technologies, particulate matter analysis and source apportionment, and the fate of mercury in the environment. Computer-based modeling efforts utilize various kinetic, systems engineering, thermodynamic, artificial neural network, statistical, computation fluid dynamics, and atmospheric dispersion models. These models are used in combination with models developed at the EERC to predict the impacts of fuel properties and system operating conditions on system efficiency, economics, and emissions. Mr. Laumb has an M.S. degree in Chemical Engineering, a B.S. degree in Chemistry, and 15 years of experience in research and project management.

Mr. Joshua Stanislowski, Principal Process Engineer at the EERC, will serve as the lead for Task 2 – Gasifier Selection and Syngas Stability. Mr. Stanislowski has managed gasification projects at the EERC for the past 10 years, including evaluating the performance of various lignite fuels in commercial gasifier configurations. He holds M.S. and B.S. degrees in Chemical Engineering, with his thesis work focused on the impact of coal-derived impurities on the performance of hydrogen separation membranes. Prior to his current position, Mr. Stanislowski served as a process engineer for Innovex, Inc. His principal areas of expertise include fossil fuel conversion with emphasis on hydrogen separation and

CO_2 capture, gasification system analysis, pollution control, and process modeling. He has extensive experience with Aspen software and systems engineering, process controls, and project management.

Dr. Michael L. Swanson, Principal Engineer for Fuels Conversion at the EERC, will serve as lead for Task 4 – Syngas Combustion. Dr. Swanson is currently involved with the demonstration of advanced power systems such as pressurized fluidized-bed combustors and IGCC, with an emphasis on hot-gas cleanup issues. He received a Ph.D. degree in Energy Engineering, a M.B.A., and M.S. and B.S. degrees in Chemical Engineering. Dr. Swanson's principal areas of expertise include pressurized fluidized-bed combustion, IGCC, hot-gas cleanup, coal reactivity in low-rank coal combustion, supercritical solvent extraction, and liquefaction of low-rank coals. Dr. Swanson is a member of the American Institute of Chemical Engineers and the American Chemical Society.

Industry Partners: The industry partners for this project are ALLETE and BEPC. ALLETE is the parent company of Minnesota Power and BNI Coal. ALLETE has had a presence in the North Dakota energy industry since it acquired BNI Coal in 1988 and has been a partner in electric generation utilizing North Dakota lignite since the Milton R. Young Station Unit 2 was constructed in 1977. Past ALLETE research efforts have looked on using North Dakota lignite for emission control applications and developing previous lignite-fueled clean coal electric generation projects.

The other industry funding partner for this Project, BEPC (and subsidiary of Dakota Gasification Company), also has substantial ties to the North Dakota lignite industry and to both electric generation utilizing lignite and gasification of lignite. BEPC brings valuable experience that will help the project through increasing the understanding of what types of equipment and systems will work for a cycle design using North Dakota lignite and what types will not work. This experience also extends to understanding the challenges of operating a system such as the Allam Cycle and what future considerations need to be addressed to further this technology design.

Technology Owner and Developer: 8 Rivers is an innovation and technology commercialization firm that has invented and developed the novel oxy-fuel thermodynamic power cycle known as the Allam Cycle. 8 Rivers is focused on further developing, improving, and commercializing the Allam Cycle platform for the specific application of utilizing solid fuels. 8 Rivers draws on a team of diverse talents in areas such as scientific research, applied engineering, financial analysis, and business management.
8 Rivers invented the Allam Cycle and has been leading the work in further researching and developing the Allam Cycle for multiple commercial applications. 8 Rivers holds the primary patent on the Allam Cycle (U.S. Patent No. 8,596,075) and other patents and patent applications related to it, including for the solid and mixed fuel application concept (U.S. Patent No. 8,596,075).

VALUE TO NORTH DAKOTA

The North Dakota lignite industry, which has a $3 billion economic impact on the state, is severely challenged under the myriad of new environmental regulations. The continued health of the industry is in jeopardy if solutions to carbon emissions are not developed that support ongoing lignite-fueled electric generation. Technology solutions must be competitive and reasonable to meet utility resource planning needs and continue to provide stability to the nation's transmission and distribution systems.

Because of these challenges, and in order to secure North Dakota lignite's future in continued energy production, novel and innovative technologies are needed to improve efficiency and reduce the CO_2 footprint of the fuel. Advanced, highly efficient technologies such as the Allam Cycle provide a promising route for continued use of lignite at higher efficiency with lower cost and with lower CO_2 emissions. The Allam Cycle has been identified by the state's industrial leaders as one of the most promising options for clean and efficient power generation. Demonstration of an advanced technology that can utilize the state's abundant resources to provide valuable products is critical to ensure continued, increased, and responsible lignite use for decades to come.

In addition to the benefits to the lignite industry in North Dakota, the oil and gas industry will also have a need for CO_2 in the future in order to maintain high levels of oil production. The Allam Cycle

inherently produces a pure stream of CO_2 at elevated pressure and, therefore, is a promising option to meet future demand for CO_2 in North Dakota while supporting continued use of lignite as the generation fuel.

MANAGEMENT

The project manager will be Mr. Michael Holmes, who will focus on ensuring the overall success of this project by providing experienced management and leadership to all activities within the project. Mr. Holmes will ensure that the project is carried out within budget, schedule, and scope. Mr. Holmes will also be responsible for the effective communication between all project partners and EERC project personnel. Resumes of key personnel are included in Appendix A. The management structure for this project is shown in Figure 3.

Once the project is initiated, monthly or as-needed conference calls will be held with project sponsors and team members to review project status. Quarterly reports will be prepared and submitted to project sponsors for review. Regular meetings will be held to review the status and results of the project and discuss directions for future work.

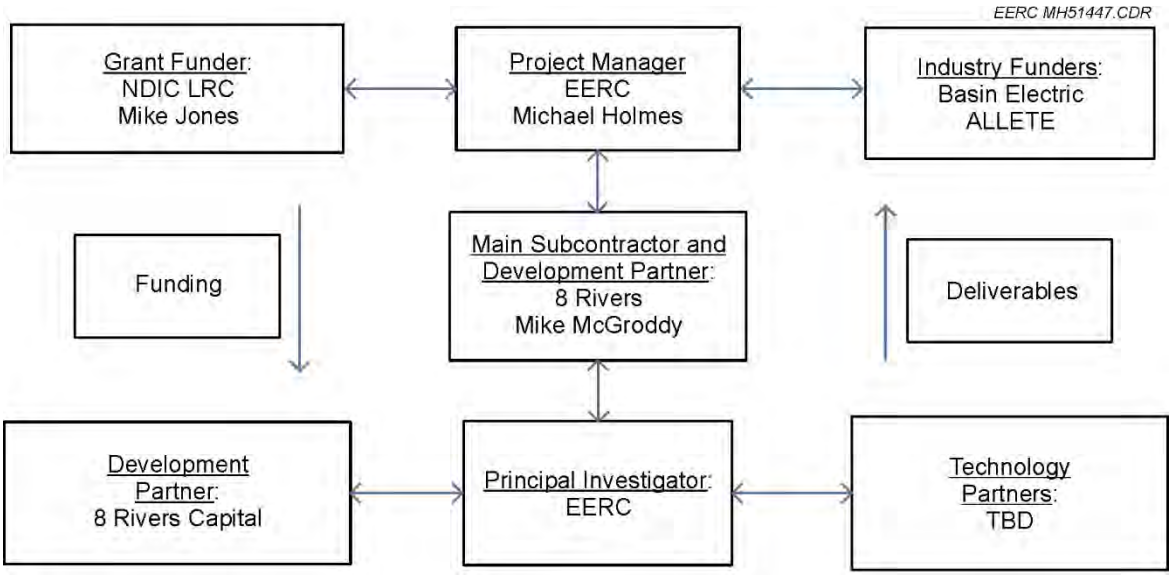

Figure 3. Project management structure.

Several milestones and decision points have been identified for the program. Milestones include viability of postcombustion technology, completion of materials selection, gasifier selection, and selection of an impurity removal system. The timing of the milestones and decision points is indicated on the time line in Figure 4.

TIMETABLE AND DELIVERABLES

A time line for the project activities is shown in Figure 4. The project is anticipated to be initiated by December 1, 2015, and completed by November 30, 2016. The primary deliverable will be the final report, due upon completion of the project. This project will provide results in the form of a study report including information regarding the most feasible system, and materials, the best candidate gasifiers, the

ID	Task Name	Start	Finish
1	**Task 1 – Corrosion Study**	12/1/2015	7/29/2016
2	**Task 2 – Gasifier Selection and Syngas Stability**	12/1/2015	9/30/2016
3	**Task 3 – Impurity Removal**	4/1/2016	11/30/2016
4	**Task 4 – Syngas Combustion**	12/1/2015	9/30/2016
5	**Task 5 – Management and Reporting**	12/1/2015	11/30/2016
6	**Milestones**		
7	Viability of postcombustion removal determined		6/30/2016
8	Completion of materials selection and feasibility of postcombustion sulfur removal		7/29/2016
9	Gasification vendor(s) selected, preliminary commercial design completed		9/30/2016
10	Selection of impurity removal system		11/30/2016

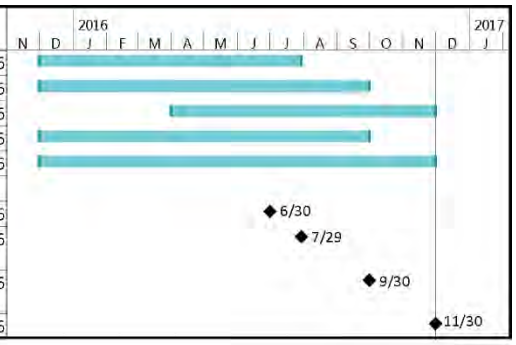

EERC MH51449.CDR

Figure 4. Project schedule and milestones.

possible gas cleanup systems, and the key challenges to further development of this technology fueled on North Dakota lignite.

The final report will address the following:

1) Identification of the candidate materials of construction for a sCO_2 power system design fueled using North Dakota lignite.
2) Determination of which current market components (gasifier, impurity removal) best fit the Allam Cycle components (syngas combustor, turbine) and power cycle design.

3) Further completion of performance and preliminary economic modeling to determine expected performance characteristics.
4) Identification of the key challenges moving forward associated with integrating and operating this power cycle using North Dakota lignite as the fuel where further development could be required.

The final report is the deliverable in which the state has the intellectual property rights provided in Administrative Code Section 43-03-06-03. The technological information underlying the study cannot be subject to this code provision as that constitutes preexisting intellectual property of 8 Rivers and was not developed with funding from this grant application.

BUDGET

The total estimated cost of the proposed project is $3,180,000. Budget details can be found in Table 1. NDIC LEC is asked to provide $1,480,000 for this project, and the remaining $1,700,000 will be provided by DOE and industry partners as detailed in the funding distribution in Table 3. Table 2 provides a breakdown of labor categories and hours for the project. The budget justification can be found in Appendix D. If the requested amount of funding is not available, then the proposed objectives will be unattainable because project success is directly tied to the integration of the various technical activities.

MATCHING FUNDS

Funding for the proposed effort will come from state, industry, and federal sources. The total estimated cost of the proposed project is $3,180,000. The EERC is requesting $1,480,000 from the state through NDIC LEC. The EERC anticipates matching this funding with existing federal sponsorship in the amount of $900,000 from DOE, which has already been awarded through Agreement No. DE-FE0024233, and $125,000 each from the industrial partners ALLETE and BEPC. In addition, the industrial partners will provide $25,000 each in the form of in-kind services, and the technology owner and developer, 8 Rivers, will also provide $500,000 in the form of in-kind contributions.

Table 1. Project Budget

CATEGORY	LEC SHARE	OTHER COST SHARE	PROJECT TOTAL
Total Labor	$ 515,990	$ 585,613	$ 1,101,603
Travel	$ 19,123	$ 14,642	$ 33,765
Equipment > $5000	$ 15,000	$ -	$ 15,000
Supplies	$ 13,188	$ 22,594	$ 35,782
Subcontractor – 8 Rivers Capital	$ 480,000	$ -	$ 480,000
Communications	$ 464	$ 460	$ 924
Printing & Duplicating	$ 540	$ 379	$ 919
Food	$ 236	$ 529	$ 765
Laboratory Fees & Services			
Natural Materials Analytical Research Lab	$ 15,328	$ 4,546	$ 19,874
Analytical Research Lab	$ -	$ 2,472	$ 2,472
Combustion Test Service	$ 19,611	$ 63,162	$ 82,773
Particulate Analysis Lab	$ 3,967	$ 541	$ 4,508
Fuel Preparation Service	$ 1,918	$ -	$ 1,918
Continuous Fluidized-Bed Reactor Service	$ 15,182	$ 24,842	$ 40,024
Graphics Service	$ 4,410	$ 976	$ 5,386
Shop & Operations	$ 4,873	$ 7,657	$ 12,530
Technical Software Fee	$ 31,266	$ 25,846	$ 57,112
Total Direct Costs	$ 1,141,096	$ 754,259	$ 1,895,355
Facilities & Admin. Rate – % of MTDC	$ 338,904	$ 395,741	$ 734,645
Total Cash Requested – U.S. Dollars	$ 1,480,000	$ 1,150,000	$ 2,630,000
Total In-kind Cost Share	$ -	$ 550,000	$ 550,000
Total Project Costs – U.S. Dollars	$ 1,480,000	$ 1,700,000	$ 3,180,000

Table 2. Project Labor Hours

	Labor Hours		
Labor Categories	**LEC Share**	**Other Cost Share**	**Total per Category**
Research Scientists/Engineers	4,454	4,955	9,409
Research Technicians	545	711	1,256
Mechanics/Operators	561	869	1,430
Senior Management	170	165	335
Technical Support Services	111	176	287
Total per Task	**5,841**	**6,876**	**12,717**

Table 3 shows the distribution of funds for the project.

Table 3. Funding Distribution

Service Provider	Cost for Services to Be Provided	In-Kind Services to Be Provided	Total Budget
EERC	$2,150,000	$ –	$2,150,000
8 Rivers	$480,000*	$500,000	$980,000
ALLETE	$ –	$25,000	$25,000
BEPC	$ –	$25,000	$25,000
Project Budget	$2,630,000	$550,000	$3,180,000

*8 Rivers is a subcontractor through the EERC.

TAX LIABILITY

The EERC, as part of the University of North Dakota, is a state-controlled institution of higher education and is not a taxable entity; therefore, it has no tax liability.

MANUFACTURING WAIVER REQUIREMENT

The EERC requests, as a part of this application, that NDIC provide a waiver for the requirements listed in Chapter 43-03-06-04 of the North Dakota Administrative Code in reference to having all manufacturing of new technology or systems substantially occur in the state of North Dakota. Since this project involves a feasibility study and design of a new power system, there will be no manufacturing that will occur as a part of this project. However, if an additional phase of research and development occurs beyond this feasibility study to further the potential for application of this technology, the EERC cannot commit on behalf of the technology provider that any manufacturing of equipment will be completed in North Dakota and asks for a waiver of this requirement to not hinder further development of this promising technology.

CONFIDENTIAL INFORMATION

No confidential material is included in this proposal.

PATENTS/RIGHTS TO TECHNICAL DATA

The technological information underlying the study cannot be subject to this code provision as that constitutes preexisting intellectual property of 8 Rivers and was not developed with funding from this application.

APPENDIX A

RESUMES OF KEY PERSONNEL

MICHAEL J. HOLMES
Director of Energy Systems Development
Energy & Environmental Research Center (EERC), University of North Dakota (UND)
15 North 23rd Street, Stop 9018, Grand Forks, North Dakota 58202-9018 USA
Phone: (701) 777-5276, Fax: (701) 777-5181, E-Mail: mholmes@undeerc.org

Principal Areas of Expertise
Mr. Holmes's principal areas of interest and expertise include CO_2 capture; fuel processing; gasification systems for coproduction of hydrogen, fuels, and chemicals with electricity; process development and economics for advanced energy systems; and emission control (air toxics, SO_2, NO_x, H_2S, and particulate technologies). He has managed numerous large-scale projects in these areas. In addition, he currently oversees Fossil Energy areas of research at the EERC in his role as Deputy Associate Director for Research.

Qualifications
M.S., Chemical Engineering, University of North Dakota, 1986.
B.S., Chemistry and Mathematics, Mayville State University, 1984.

Professional Experience
2005–Present: Director of Energy Systems Development, EERC, UND. Mr. Holmes currently oversees fossil energy research areas at the EERC, including coproduction of hydrogen, fuels, and chemicals with electricity in gasification systems; advanced energy systems; emission control technology projects involving mercury, SO_2, NO_x, H_2S, and particulate; and CO_2 capture technology projects.

2001–2004: Senior Research Advisor, EERC, UND. Mr. Holmes was involved in research in a range of areas, including emission control, fuel utilization, process development, and process economic evaluations. Specific duties included marketing and managing research projects and programs, providing group management and leadership, preparing proposals, interacting with industry and government organizations, designing and overseeing effective experiments as a principal investigator, researching the literature, interpreting data, writing reports and papers, presenting project results to clients, and presenting papers at conferences.

1986–2001: Process Development Engineer (Principal Research Engineer), McDermott Technology, Inc., Alliance, Ohio. Mr. Holmes's responsibilities included project management and process research and development for projects involving advanced energy systems, environmental processing, combustion systems, fuel processing, and development of new process measurement techniques. He also served as Project Manager and Process Engineer for projects involving evaluation of air toxic emissions from coal-fired power plants; development of low-cost solutions for air toxic control focused on mercury emissions; development of wet and dry scrubber technologies; demonstration of low-level radioactive liquid waste remediation; in-duct spray drying development; development of improved oil lighter burners; limestone injection

multistaged burning; the ESO_x process; the SO_x–NO_x–Rox Box™ process; and the limestone injection dry-scrubbing process.

Professional Memberships

Fuel Cell and Hydrogen Energy Association
- Board of Directors, 2011–present
- Executive Member, 2011–present
- Technical Chair for the 2011 Fuel Cell and Hydrogen Energy Association Conference

National Hydrogen Association
- Board Member, 2004–2011
- Executive Committee Member, 2009–2010
- Cochair of Hydrogen from Coal Group, 2008–2010

Subbituminous Energy Coalition
- Board Member, 2003–2008

Mountain States Hydrogen Business Council
- Board Member, 2009–2010

Tau Beta Pi

Patents

Collings, M.; Aulich, T.R.; Timpe, R.C.; Holmes, M.J. System and Process for Producing High-Pressure Hydrogen. U.S. Patent 8,182,787, May 22, 2012.

Holmes, M.J.; Ohrn, T.R.; Chen, C.M.-P. Ion Transport Membrane Module and Vessel System with Directed Internal Gas Flow. U.S. Patent 7,658,788, Feb 9, 2010.

Holmes, M.J.; Pavlish, J.H.; Olson, E.S.; Zhuang, Y. High Energy Dissociation for Mercury Control Systems. U.S. Patent 7,615,101 B2, 2009.

Holmes, M.J.; Pavlish, J.H.; Zhuang, Y.; Benson, S.A.; Olson, E.S.; Laumb, J.D. Multifunctional Abatement of Air Pollutants in Flue Gas. U.S. Patent 7,628,969 B2, 2009.

Olson, E.S.; Holmes, M.J.; Pavlish, J.H. Sorbents for the Oxidation and Removal of Mercury. U.S. Patent Application 2005-209163, Aug 22, 2005.

Olson, E.; Holmes, M.; Pavlish, J. Process for Regenerating a Spent Sorbent. International Patent Application PCT/US2004/012828, April 23, 2004.

Madden, D.A.; Holmes, M.J. Alkaline Sorbent Injection for Mercury Control. U.S. Patent 6,528,030 B2, Nov 16, 2001.

Madden, D.A.; Holmes, M.J. Alkaline Sorbent Injection for Mercury Control. U.S. Patent 6,372,187 B1, Dec 7, 1998.

Holmes, M.J.; Eckhart, C.F.; Kudlac, G.A.; Bailey, R.T. Gas Stabilized Reburning for NO_x Control. U.S. Patent 5,890,442, April 6, 1999.

Holmes, M.J.; Eckhart, C.F.; Kudlac, G.A.; Bailey, R.T. Gas Stabilized Reburning for NO_x Control. U.S. Patent 5,890,442, Jan 23, 1996.

Holmes, M.J. Three-Fluid Atomizer. U.S. Patent 5,484,107, May 13, 1994.

Bailey, R.T.; Holmes, M.J. Low-Pressure Loss/Reduced Deposition Atomizer. U.S. Patent 5,129,583, March 21, 1991.

Awards

Accepted the 2010 Robert M. Zweig Public Education Award for Hydrogen on behalf of the EERC.

Lignite Energy Council Distinguished Service Award, Government Action Program (Regulatory), 2005.

Lignite Energy Council Distinguished Service Award, Research and Development, 2003.

Member of the Tau Beta Pi – Engineering Honor Society.

Publications and Presentations

Has authored or coauthored more than 120 publications and presentations.

JOHN P. KAY
Principal Engineer, Emissions and Carbon Capture Group Lead
Energy & Environmental Research Center (EERC), University of North Dakota (UND)
15 North 23rd Street, Stop 9018, Grand Forks, North Dakota 58202-9018 USA
Phone: (701) 777-4580, Fax: (701) 777-5181, E-Mail: jkay@undeerc.org

Principal Areas of Expertise
Mr. Kay's principal areas of interest and expertise include applications of solvents for removing CO_2 from gas streams to advance technology and look toward transformational concepts and techno-economic assessments. He has 6 years of experience in field testing site management and sampling techniques for hazardous air pollutants and mercury control in combustion systems along with10 years of experience utilizing scanning electron microscopy (SEM), x-ray diffraction (XRD), and x-ray fluorescence (XRF) techniques to analyze coal, fly ash, biomass, ceramics, and high-temperature specialty alloys. He is also interested in computer modeling systems, high-temperature testing systems, and gas separation processes and is a FLIR Systems, Inc.-certified infrared thermographer.

Qualifications
B.S., Geological Engineering, University of North Dakota, 1994.
Associate Degree, Engineering Studies, Minot State University, 1989.

Professional Experience
2011–Present: Principal Engineer, Emissions and Carbon Capture Group Lead, EERC, UND. Mr. Kay's responsibilities include management of CO_2 separation research related to bench-, pilot-, and demonstration-scale equipment for the advancement of the technology. This also includes the development of cleanup systems to remove SO_x, NO_x, particulate, and trace elements to render flue gas clean enough for separation.

2005–2011: Research Manager, EERC, UND. Mr. Kay's responsibilities included the management and supervision of research involving the design and operation of bench-, pilot-, and demonstration-scale equipment for development of clean coal technologies. The work also involved the testing and development of fuel conversion (combustion and gasification) and gas cleanup systems for the removal of sulfur, nitrogen, particulate, and trace elements.

1994–2005: Research Specialist, EERC, UND. Mr. Kay's responsibilities included conducting SEM, XRD, and XRF analysis and maintenance; creating innovative techniques for the analysis and interpretation of coal, fly ash, biomass, ceramics, alloys, high-temperature specialty alloys, and biological tissue; managing the day-to-day operations of the Natural Materials Analytical Research Laboratory; supervising student workers; developing and performing infrared analysis methods in high-temperature environments; and performing field work related to mercury control in combustion systems.

1993–1994: Research Technician, Agvise Laboratories, Northwood, North Dakota. Mr. Kay's responsibilities included receiving and processing frozen soil samples for laboratory testing of chemical penetration, maintaining equipment and inventory, and training others in processing techniques utilizing proper laboratory procedures.

1991–1993: Teaching Assistant, Department of Geology and Geological Engineering, UND. Mr. Kay taught Introduction to Geology Recitation, Introduction to Geology Laboratory, and Structural Geology. Responsibilities included preparation and grading of assignments and administering and grading class examinations.

1990–1992: Research Assistant, Natural Materials Analytical Laboratory, EERC, UND. Mr. Kay's responsibilities included operating an x-ray diffractometer and interpreting and manipulating XRD data, performing software manipulation for analysis of XRD data, performing maintenance and repair of the XRD machine and sample carbon coating machine, preparing samples for XRD and SEM analysis, and performing point count analysis on the SEM.

Professional Memberships
ASM International
American Ceramic Society
Microscopy Society of America

Publications and Presentations
Has authored or coauthored numerous publications.

JASON D. LAUMB
Principal Engineer, Coal Utilization Group Lead
Energy & Environmental Research Center (EERC), University of North Dakota (UND)
15 North 23rd Street, Stop 9018, Grand Forks, ND 58202-9018 USA
Phone: (701) 777-5114, Fax: (701) 777-5181, E-Mail: jlaumb@undeerc.org

Principal Areas of Expertise
Mr. Laumb's principal areas of interest and expertise include biomass and fossil fuel conversion for energy production, with an emphasis on ash effects on system performance. He has experience with trace element emissions and control for fossil fuel combustion systems, with a particular emphasis on air pollution issues related to mercury and fine particulates. He also has experience in the design and fabrication of bench- and pilot-scale combustion and gasification equipment.

Qualifications
M.S., Chemical Engineering, University of North Dakota, 2000.
B.S., Chemistry, University of North Dakota, 1998.

Professional Experience
2008–Present: Principal Engineer, Coal Utilization Group Lead, EERC, UND. Mr. Laumb's responsibilities include leading a multidisciplinary team of 30 scientists and engineers whose aim is to develop and conduct projects and programs on power plant performance, environmental control systems, the fate of pollutants, computer modeling, and health issues for clients worldwide. Efforts are focused on the development of multiclient jointly sponsored centers or consortia that are funded by government and industry sources. Current research activities include computer modeling of combustion/gasification and environmental control systems, performance of selective catalytic reduction technologies for NO_x control, mercury control technologies, hydrogen production from coal, CO_2 capture technologies, particulate matter analysis and source apportionment, the fate of mercury in the environment, toxicology of particulate matter, and in vivo studies of mercury–selenium interactions. Computer-based modeling efforts utilize various kinetic, systems engineering, thermodynamic, artificial neural network, statistical, computation fluid dynamics, and atmospheric dispersion models. These models are used in combination with models developed at the EERC to predict the impacts of fuel properties and system operating conditions on system efficiency, economics, and emissions.

2001–2008: Research Manager, EERC, UND. Mr. Laumb's responsibilities included supervising projects involving bench-scale combustion testing of various fuels and wastes; supervising a laboratory that performs bench-scale combustion and gasification testing; managerial and principal investigator duties for projects related to the inorganic composition of coal, coal ash formation, deposition of ash in conventional and advanced power systems, and mechanisms of trace metal transformations during coal or waste conversion; and writing proposals and reports applicable to energy and environmental research.

2000–2001: Research Engineer, EERC, UND. Mr. Laumb's responsibilities included aiding in the design of pilot-scale combustion equipment and writing computer programs that aid in the reduction of data, combustion calculations, and prediction of boiler performance. He was also involved in the analysis of current combustion control technology's ability to remove mercury and studying in the suitability of biomass as boiler fuel.

1998–2000: SEM Applications Specialist, Microbeam Technologies, Inc., Grand Forks, North Dakota. Mr. Laumb's responsibilities included gaining experience in power system performance including conventional combustion and gasification systems; a knowledge of environmental control systems and energy conversion technologies; interpreting data to predict ash behavior and fuel performance; assisting in proposal writing to clients and government agencies such as the National Science Foundation and the U.S. Department of Energy; preparing and analyzing coal, coal ash, corrosion products, and soil samples using SEM/EDS; and modifying and writing FORTRAN, C+, and Excel computer programs.

Professional Memberships
American Chemical Society

Publications and Presentations
Has coauthored numerous professional publications.

JOSHUA J. STANISLOWSKI
Principal Process Engineer
Energy & Environmental Research Center (EERC), University of North Dakota (UND)
15 North 23rd Street, Stop 9018, Grand Forks, North Dakota 58202-9018 USA
Phone: (701) 777-5087, Fax: (701) 777-5181, E-Mail: jstanislowski@undeerc.org

Principal Areas of Expertise
Mr. Stanislowski's principal areas of interest and expertise include coal and biomass gasification systems with an emphasis on novel syngas cooling, cleanup, and separation technologies. He has worked extensively with hydrogen separation membrane systems and liquid fuels catalysis. He is proficient in process modeling and systems engineering including techno-economic studies using Aspen Plus software. He has significant experience with process engineering, process controls, and project management. He has a strong background in gauge studies, experimental design, and data analysis.

Qualifications
M.S., Chemical Engineering, University of North Dakota, 2012.
B.S., Chemical Engineering, University of North Dakota, 2000.
Six Sigma Green Belt Certified, August 2004.

Professional Experience:
2015–Present: Principal Process Engineer, EERC, UND, Grand Forks, North Dakota. Mr. Stanislowski works closely with the EERC management team to develop new programmatic directions to solve challenges in the energy industry. He manages projects in the area of gasification, CO_2 capture, and systems engineering.

2008–2015: Research Manager, EERC, UND, Grand Forks, North Dakota. Mr. Stanislowski managed projects in the areas of gasification, gas cleanup, hydrogen production, liquid fuel production, and systems engineering.

2005–2008: Research Engineer, EERC, UND, Grand Forks, North Dakota. Mr. Stanislowski's areas of focus included mercury control technologies and coal gasification. His responsibilities involved project management and aiding in the completion of projects. His duties included design and construction of bench- and pilot-scale equipment, performing experimental design, data collection, data analysis, and report preparation. He also worked in the areas of low-rank coal gasification, warm-gas cleanup, and liquid fuels production modeling using Aspen Plus software.

2001–2005: Process Engineer, Innovex, Inc., Litchfield, Minnesota.
- Mr. Stanislowski was responsible for various process lines including copper plating, nickel plating, tin–lead plating, gold plating, polyimide etching, copper etching, chrome etching, and resist strip and lamination. His responsibilities included all aspects of the process line including quality control, documentation, final product yields, continuous process

improvement, and operator training. He gained extensive knowledge of statistical process control and statistical start-up methodology. Mr. Stanislowski was proficient with MiniTab statistical software and utilized statistical analysis and experimental design as part of his daily work.

– Mr. Stanislowski designed and oversaw experiments as a principal investigator; wrote technical reports and papers, including standard operating procedures and process control plans; presented project and experimental results to suppliers, customers, clients, and managers; created engineering designs and calculations; and performed hands-on mechanical work when troubleshooting process issues. He demonstrated the ability to coordinate activities with varied entities through extensive project management and leadership experience.

1998–2000: Student Research Assistant, EERC, UND. Mr. Stanislowski worked on a wide variety of projects, including data entry and programming for the Center for Air Toxic Metals® (CATM®) database, contamination cleanup program development, using aerogels for emission control, and the development of a nationwide mercury emission model.

Publications and Presentations
Has coauthored several publications.

DR. MICHAEL L. SWANSON
Principal Engineer, Fuels Conversion
Energy & Environmental Research Center (EERC), University of North Dakota (UND)
15 North 23rd Street, Stop 9018, Grand Forks, North Dakota 58202-9018 USA
Phone: (701) 777-5239, Fax: (701) 777-5181, E-Mail: mswanson@undeerc.org

Principal Areas of Expertise

Dr. Swanson's principal areas of interest and expertise include integrated gasification combined cycle (IGCC), pressurized fluidized-bed combustion (PFBC), hot-gas cleanup, coal reactivity in low-rank coal (LRC) combustion, supercritical solvent extraction, and liquefaction of LRCs.

Qualifications

Ph.D., Energy Engineering, University of North Dakota, 2000. Dissertation: Modeling of Ash Properties in Advanced Coal-Based Power Systems.
M.B.A., University of North Dakota, 1991.
M.S., Chemical Engineering, University of North Dakota, 1982.
B.S., Chemical Engineering, University of North Dakota, 1981.

Professional Experience

2004–Present: Adjunct Professor, Chemical Engineering, UND.

1999–Present: Principal Engineer, Fuels Conversion, EERC, UND. Dr. Swanson is currently involved in the demonstration of advanced power systems such as IGCC and PFBC, with an emphasis on hot-gas cleanup issues.

1997–1999: Research Manager, EERC, UND. Dr. Swanson managed research projects involved with the demonstration of advanced power systems such as IGCC and PFBC, with an emphasis on hot-gas cleanup issues.

1990–1997: Research Engineer, EERC, UND. Dr. Swanson was involved with the demonstration of advanced power systems such as IGCC and PFBC, with an emphasis on hot-gas cleanup issues.

1986–1990: Research Engineer, EERC, UND. Dr. Swanson supervised a contract with the U.S. Department of Energy to investigate the utilization of coal–water fuels in gas turbines, where he designed, constructed, and operated research projects that evaluated the higher reactivity of low rank coals in short-residence-time gas turbines and diesel engines.

1983–1986: Research Engineer, EERC, UND. Dr. Swanson designed, constructed, and operated supercritical fluid extraction (SFE) and coal liquefaction apparatus; characterized the resulting organic liquids and carbonaceous chars; and prepared reports.

1982–1983: Associated Western Universities Postgraduate Fellowship, Grand Forks Energy Technology Center, U.S. Department of Energy, Grand Forks, North Dakota. Dr. Swanson designed and constructed an SFE apparatus.

Publications and Presentations

Has authored or coauthored numerous publications.

APPENDIX B

DESCRIPTION OF EQUIPMENT

DESCRIPTION OF EQUIPMENT

AUTOCLAVE

A schematic is shown in Figure B-1. This bolted-closure reactor is externally heated by electric (ceramic band-type) heaters and is equipped with an automatic temperature controller and a variable-speed, magnetically driven stirrer. It is instrumented to continuously measure and trend pressure plus slurry and vapor temperatures. The stainless steel autoclave is rated at 5500 psi at 340°C. The product gas is vented after completion of a test and travels through a diaphragm meter to quantify the noncondensibles. The system is complete with numerous high-pressure valves and fittings. Normal testing procedures are to slurry the selected feedstock with an appropriate amount of water, catalyst, and base; charge the autoclave; and follow with heat treatment. Once the material has been sufficiently treated, the heaters are shut off and the contents allowed to cooldown overnight prior to product collection. The slurry can be continuously stirred throughout heatup, temperature stabilization, and cooldown. After cooldown, various samples are collected for analysis. Heatup to 300°C takes approximately 2 hours, with cooldown to ambient taking about 10 hours.

At any point during heat treatment, as long as pressure in the autoclave is sufficient to facilitate flow, samples of the slurry can be taken. This is achieved by inserting a dip tube through a high-pressure fitting on the head of the autoclave down into the slurry fraction of the reactor contents. The dip tube is equipped with a 15-µm stainless steel filter that is welded on the end to prevent pulling any solids into the sample line. The filter is placed at a level in between the two blades of the stirring rod. A 2-µm filter is also available if the 15-µm filter proves to be too large,

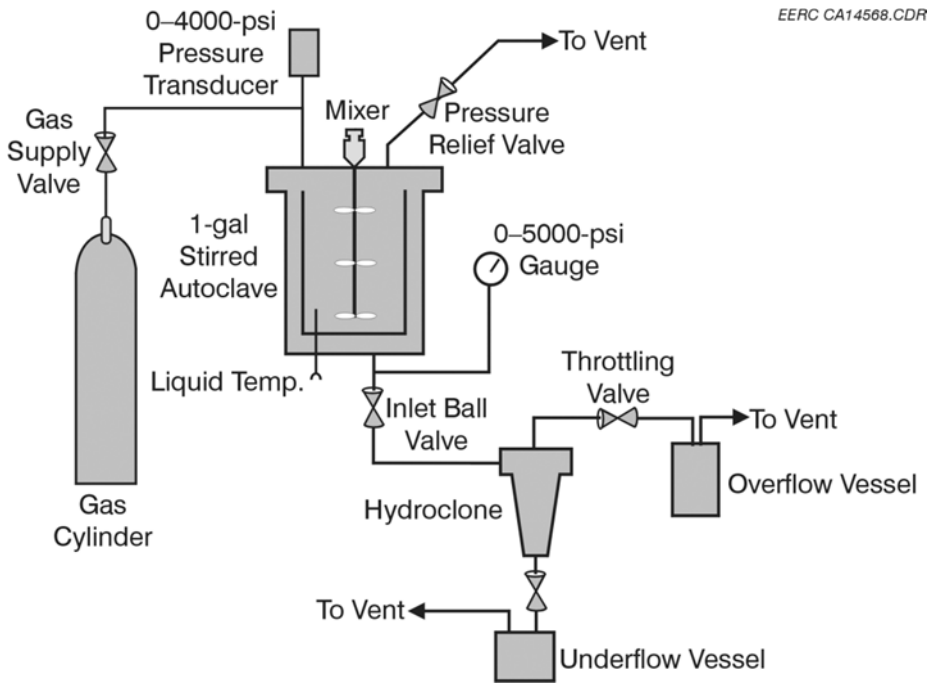

Figure B-1. Schematic of the 2-gallon autoclave system.

allowing solids into the sample line. Outside the autoclave, two valves are positioned in series on the downstream side of the dip tube—a ball valve followed by a metering valve. The valves are connected to a 25-mL sample container made from a section of ¾" stainless steel tubing that is capped on the bottom. The sample container is placed directly in an ice bath. When a sample is to be taken, the ball valve is opened first, followed by the metering valve, which controls the flow of liquid into the sample container. Once flow has stopped, the valves are closed and the sample is allowed to cool in the ice bath for a sufficient time to quench the reaction and condense any flashed steam. The sample container is then removed, and the sample collected. Because pressurized liquid will remain on the upstream side of the valves, it may be necessary to take double samples to clear out the dip tube line, ensuring the sample is representative of the reactor contents at that time.

Using nearly the same setup, hot-gas samples can be taken as well. Without using the dip tube, samples are pulled into a sample container with a plumbed-in pressure gauge. The pressure is equalized and the valves are closed, isolating the gas sample from the autoclave. Any steam that is in the sample is allowed to condense in the ice bath. The gas sample is injected into the gas chromatography (GC) on the valve side of the sample container.

FLUID-BED GASIFIER

The high-pressure fluid-bed gasifier (FBG) is capable of feeding up to 9.0 kg/hr (20 lb/hr) of pulverized coal or biomass at pressures up to 70 bar absolute (1000 psig). The externally heated bed is initially charged from an independent hopper with silica sand or, in the case of high-alkali fuels, an appropriate fluidization media. Independent mass flow controllers meter the flow of nitrogen, oxygen, steam, and recycled syngas or flue gas into the bottom of the fluid bed. Various safety interlocks prevent the inadvertent flow of pure oxygen into the bed or reverse flow into the coal feeder.

The reactor was designed with the capability to operate at a maximum operating pressure (MOP) of 1000 psig at an operational temperature of 1550°F, 650 psig at an operational temperature of 1650°F, and 300 psig at an operational temperature of 1800°F. A design drawing of the reactor is shown in Figure B-2, and a photograph of the gasifier is shown in Figure B-3. Although omitted from the drawing for clarity, 16 thermocouple ports are spaced every 4–5 inches up the bed to monitor for loss of fluidization, solids agglomeration, and localized combustion zones, and the feed line extends up two stories to the coal hopper.

Coal is fed from a pressurized K-tron® loss-in-weight feeder that provides online measurement of coal feed rate at pressures up to 1000 psig. This system (shown schematically in Figure B-4) allows instantaneous measurement of the fuel feed rate to the fluid-bed conversion system. The feed system electronic controls are interfaced to a data acquisition system that allows for local or remote computer control of the fuel feed rate. Above the main feed hopper is the fuel charge hopper. The fuel charge hopper is manually charged with fuel through the top valve while at atmospheric pressure. It is then sealed and pressurized. Finally, the fuel feed material is transferred by gravity feed to the weigh hopper inside through the lower dual-valve system. The entire feed system pressure vessel is on a movable platform to allow easy transition from the FBG to the Energy & Environmental Research Center's (EERC's) entrained-flow gasifier (not used in this testing but located adjacent to the FBG).

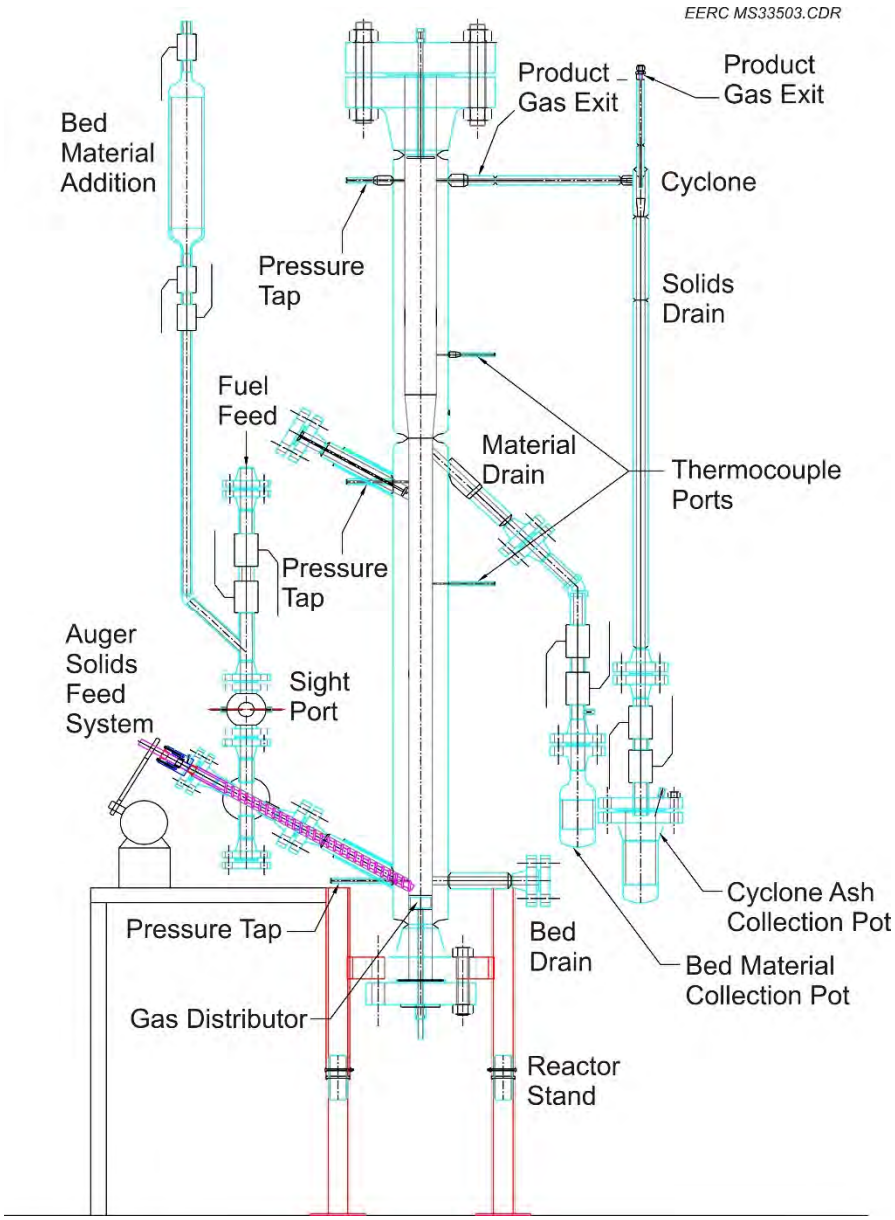

Figure B-2. Design drawing of the pressurized, fluidized gasification reactor.

Coal feed from the K-tron system drops through a long section of vertical tubing and is then pushed quickly into the fluid bed through a downward-angled feed auger, as seen in Figures B-2 and B-3. Syngas exiting the fluid bed passes through a cyclone before flowing into a hot candle filter to remove fine particulate before either bypassing or entering a series of fixed beds. This gas stream is then routed through a series of water-cooled condensers to remove volatile organics and moisture. Syngas can be sampled upstream of the condensers for hot tests. The clean, dry syngas exiting the condensers is then recycled through a compressor to the bottom of the FBG, and a portion is vented through a control valve to maintain system pressure. The syngas exiting the system passes through a dry gas meter for mass balance purposes. A slipstream of this

Figure B-3. Photograph of the lower section of high-pressure FBG. Visible at left is the feed auger angled downward into the bed.

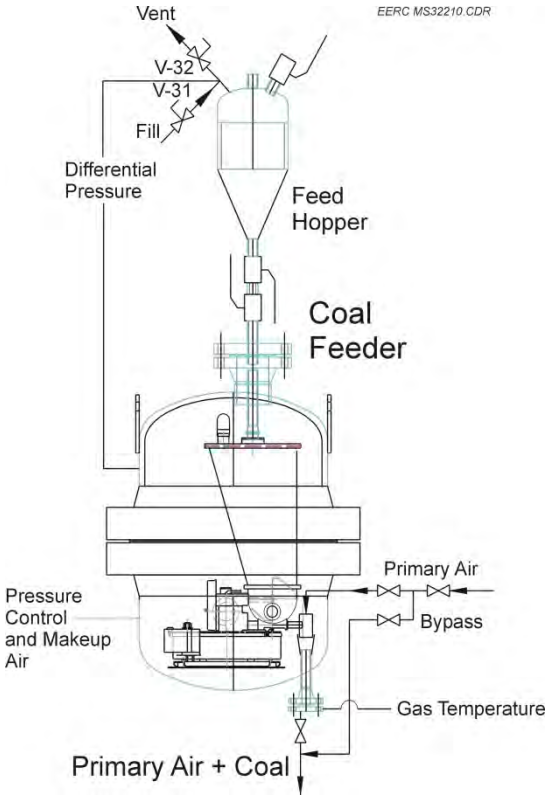

Figure B-4. Cross-sectional view of the fuel feed system.

depressurized, dry gas is also fed to either a laser gas analyzer and a GC for online analysis of major syngas components and for low-level (ppb) analysis of sulfur species or to a set of continuous emission monitors (CEMs) for flue gas composition analysis. In addition, operators periodically sample syngas from various points throughout the system using Dräger or multielement sorbent trap (MEST) activated carbon tubes for additional trace gas composition data. Figure B-5 depicts the process layout for the FBG system and the back-end gas cleanup system, including the filter vessel, fixed sorbent/catalyst beds, and quench system along with the recycle compressor.

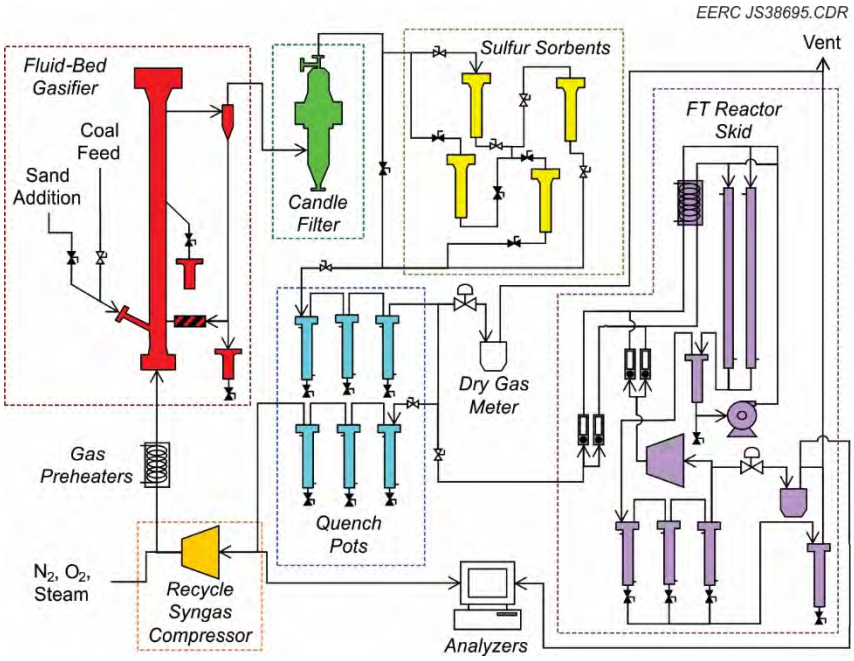

Figure B-5. FBG process layout.

Gas-Sweetening Absorption System

The EERC has designed, built, and tested a skid-mounted CO_2 and H_2S absorption system for gas sweetening. This absorption system uses physical solvents to remove CO_2 and various contaminants from dry syngas at pressures of up to 1000 psig. The system uses a column packed with Koch–Glitsch IMTP 15 random packing to contact sour gas with lean solvent for sweetening. The gas-sweetening system allows the EERC to produce syngas that more closely resembles that generated in full-scale commercial gasification and also allows the EERC to test solvents and technologies for natural gas sweetening and liquids capture. The ability to remove CO_2 from gas streams further allows the EERC to test processes incorporating carbon capture and storage. Moreover, removal of CO_2 combined with deep sweetening improves catalyst performance in the EERC's pilot-scale Fischer–Tropsch (FT) reactor.

As shown in Figure B-6, in the first step of CO_2 capture, up to 1000 scfh of pressure-regulated gas enters an absorption column. In the case of gasification, this gas can be fed either

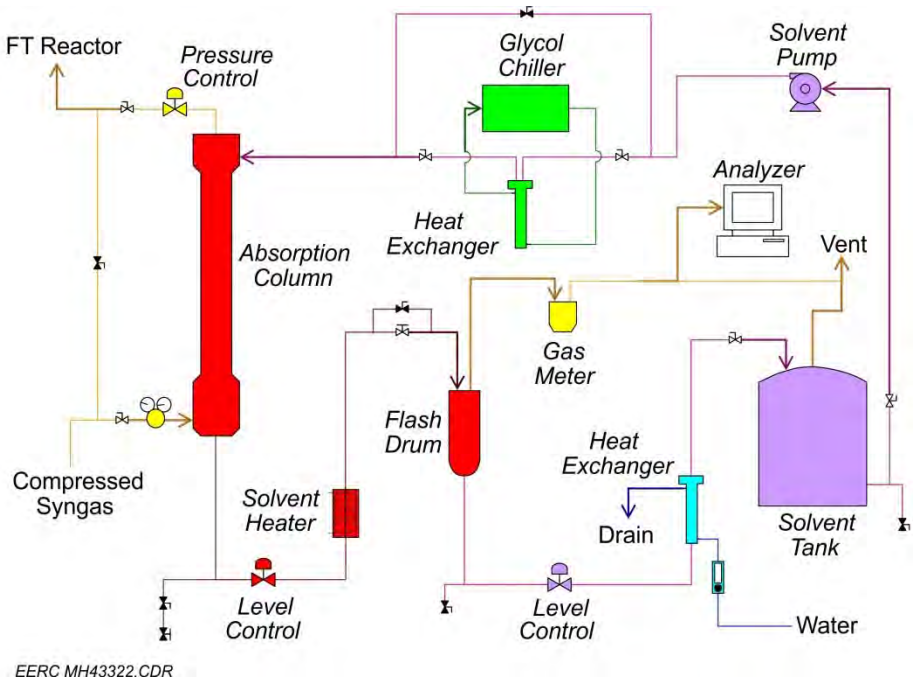

Figure B-6. Cold-gas-sweetening process configuration when using compressed syngas for FT synthesis.

directly from the gasifier quench system or the compressor. As gas rises through the packed column, downward-flowing solvent absorbs CO_2 and other gas components. The sweetened gas passes through a demister to drop entrained solvent out of suspension before the gas exits the column. Sweetened gas can then go to a number of downstream applications, including FT synthesis, materials testing, pressure swing absorption, syngas bottling, back to the gasifier as a recycle stream, or steam reforming and other applications in the case of natural gas.

Having absorbed most CO_2 and various other components from the sour gas, rich solvent collects in the bottom disengager, where gas bubbles have sufficient residence time to escape from the liquid. Solvent then flows through a control valve, a heat exchanger, and a flow constrictor before passing into a flash drum. The flow constrictor maintains some pressure upstream of the flash drum, preventing excessive cavitation in the control valve and heat exchanger.

As solvent warms and depressurizes inside the heated flash drum, CO_2 and other gases vaporize from the solvent. A flowmeter records the rate of acid gas exiting the flash drum, while a continuous gas analyzer records the gas composition. These measurements permit online mass and carbon balance calculations.

Lean solvent exits the flash drum through a level-controlling valve and then passes through a water-cooled heat exchanger on its way to a storage tank. A pump pulls solvent from the bottom of this tank and sends it through a glycol-cooled heat exchanger. The chilled, lean solvent then sprays through a nozzle into the top of the absorption column, completing the solvent loop.

Initial testing utilizing coal-derived syngas achieved closer to 98% CO_2 capture and even better H_2S removal. Modeling and experience suggest that untreated sour gas can be effectively treated using the flash drum for solvent regeneration; however, if required to meet the needs of future clients, the skid design allows upgrading the flash drum to a stripper column for improved gas sweetening and extended solvent life.

APPENDIX C

LETTERS OF SUPPORT AND LETTERS OF COMMITMENT

8 RIVERS

8 Rivers Capital, LLC

406 Blackwell Street
Crowe Building—4th Floor
Durham, NC 27701

+1 919 667-1800
www.8RiversCapital.com

Located at Durham's American Tobacco Campus

September 23, 2015

Mr. Michael Holmes
Director of Energy Systems Development
University of North Dakota
Energy & Environmental Research Center
15 North 23rd Street, Stop 9018
Grand Forks, ND 58202-9018

Dear Mr. Holmes:
This letter is in response to the Energy & Environmental Research Center's (EERC) request for participation in the proposed project entitled "Pathway to Low-Carbon Lignite Utilization," a proposal being submitted to the North Dakota Industrial Commission (NDIC).

8 Rivers Capital is committed to working with EERC to develop a lignite-based Allam Cycle in support of the industry team comprised of ALLETE, Basin Electric, and the Lignite Energy Council (LEC). The proposed effort will build off of a road map for the development of the Allam Cycle technology created by the project team for the LEC.

8 Rivers anticipates receiving a $480,000 subcontract to support the proposed scope of work, and 8 Rivers is pleased to offer support to the proposed program in the form of in-kind cost share valued at $500,000. It is understood that 8 Rivers' funding for this project will provide cost share to NDIC; therefore 8 Rivers hereby certifies that our in-kind cost share and contribution will be comprised of funding from sources other than the State of North Dakota.

We hope that NDIC gives careful consideration to this project, as there is a significant need for development of highly efficient generation cycles with lignite coal. Again, we express our interest and support of the proposed project and look forward to working with NDIC, LEC, ALLETE, Basin Electric, EERC, and other participants on this project.

Very truly yours,

Mike McGroddy
Principal

BASIN ELECTRIC POWER COOPERATIVE
1717 EAST INTERSTATE AVENUE
BISMARCK, NORTH DAKOTA 58503
PHONE 701-223-0441 FAX 701-557-5336

September 29, 2015

Mr. Michael Holmes
Director of Energy Systems Development
University of North Dakota
Energy & Environmental Research Center
15 North 23rd Street, Stop 9018
Grand Forks, ND 58202-9018

Subject: EERC Proposal No. 2016-0037, "Pathway to Low-Carbon Lignite Utilization"

Dear Mr. Holmes:

This letter is in response to the Energy & Environmental Research Center's (EERC) request for participation in the proposed project entitled "Pathway to Low-Carbon Lignite Utilization," a proposal being submitted to the North Dakota Industrial Commission (NDIC).

Basin Electric is committed to working as an industry lead to develop a lignite-based Allam Cycle in support of the team comprised of ALLETE, Basin Electric, the Lignite Energy Council (LEC), 8 Rivers Capital, and the EERC. The proposed effort will build off of a road map for the development of the Allam Cycle technology created by the project team for the LEC.

Basin Electric is pleased to offer support to the proposed program in the form of cash cost share of $125,000. Additionally, Basin Electric will also provide in-kind cost share valued at $25,000. It is understood that Basin Electric's funding for this project will provide cost share to NDIC; therefore Basin Electric hereby certifies that our cost share funding will be comprised of funding received from sources other than the State of North Dakota.

We hope that NDIC gives careful consideration to this project, as there is a significant need for development of highly efficient generation cycles with lignite coal. Again, we express our interest and support of the proposed project and look forward to working with NDIC, LEC, ALLETE, EERC, 8 Rivers Capital, and other participants on this project.

Sincerely,

Matthew E. Greek
Sr. Vice President, Engineering & Construction

/smm
cc: Dave Sauer, Dakota Gasification Company
Jim Sheldon, Basin Electric Power Cooperative
Josh Stanislowski, Energy & Environmental Research Center

GREAT RIVER ENERGY

12300 Elm Creek Boulevard
Maple Grove, Minnesota 55369-4718
763-445-5000
greatriverenergy.com

September 30, 2015

Mr. Michael Holmes
Director of Energy Systems Development
University of North Dakota
Energy & Environmental Research Center
15 North 23rd Street, Stop 9018
Grand Forks, ND 58202-9018

Dear Mr. Holmes:

Subject: EERC Proposal No. 2016-0037, "Pathway to Low-Carbon Lignite Utilization"

This letter is intended to provide our support for the Energy & Environmental Research Center's (EERC) proposed project entitled "Pathway to Low-Carbon Lignite Utilization," a proposal being submitted to the North Dakota Industrial Commission (NDIC).

Great River Energy is interested and involved in continuing to assess and develop new technologies and solutions to support the lignite industry, as there is a significant need for development of a highly efficient generation cycle for the future of the industry in North Dakota. This proposal and the pathway to develop a lignite-based Allam Cycle shows promise for our industry and our company.

We are providing this letter in support of the team comprised of ALLETE, Basin Electric, the Lignite Energy Council (LEC), 8 Rivers Capital and the EERC, who are working toward further development and commercialization of this technology. We have confidence that the project will provide benefit to the state and the lignite industry, and we look forward to working with the project team on this development pathway in the future as it proceeds toward technology commercialization.

Sincerely,

GREAT RIVER ENERGY

Richard R. Lancaster
Vice President, Generation

9/29/2015 S:\Generation\Executive Assistant Files\Rick Lancaster\LEC Partner Letter Of Support - LRC Allam Cycle Grant Request - 093015.Docx

minnesota power
AN ALLETE COMPANY

30 West Superior Street / Duluth, MN 55802

Allan S. Rudeck, Jr., P.E.
Vice President - Strategy and Planning
218-355-3480
arudeck@mnpower.com

September 30, 2015

Mr. Michael Holmes
Director of Energy Systems Development
University of North Dakota
Energy & Environmental Research Center
15 North 23rd Street, Stop 9018
Grand Forks, ND 58202-9018

Subject: EERC Proposal No. 2016-0037, "Pathway to Low-Carbon Lignite Utilization"

Dear Mr. Holmes:

This letter is in response to the Energy & Environmental Research Center's (EERC) request for participation in the proposed project entitled "Pathway to Low-Carbon Lignite Utilization," a proposal being submitted to the North Dakota Industrial Commission (NDIC).

ALLETE is committed to working as an industry lead to develop a lignite-based Allam Cycle in support of the team comprised of ALLETE, Basin Electric, the Lignite Energy Council (LEC), 8 Rivers Capital and the EERC. The proposed effort will build off of a road map for the development of the Allam Cycle technology created by the project team for the LEC.

ALLETE is pleased to offer support to the proposed program in the form of cash cost share of $125,000. Additionally, ALLETE will also provide in-kind cost share valued at $25,000. It is understood that ALLETE's funding for this project will provide cost share to NDIC; therefore ALLETE hereby certifies that our cost share funding will be comprised of funding received from sources other than the State of North Dakota.

We have confidence that the LRC and NDIC can support this project, as there is a significant need for development of this highly efficient generation cycle for the future of the lignite industry in North Dakota. Again, we express our support of the proposed project and look forward to working with the NDIC, LEC, Basin Electric, EERC, 8 Rivers Capital, and other participants on this project.

Sincerely,

Allan S. Rudeck, Jr.
Vice President – Strategy and Planning

Minnkota Power
MPC COOPERATIVE, INC.
Your Touchstone Energy® Partner

Milton R. Young Station • P.O. Box 127 • Center, ND 58530-0127 • Phone (701) 794-8711

September 30, 2015

Mr. Michael Holmes
Director of Energy Systems Development
University of North Dakota
Energy & Environmental Research Center
15 North 23rd Street, Stop 9018
Grand Forks, ND 58202-9018

Subject: EERC Proposal No. 2016-0037, "Pathway to Low-Carbon Lignite Utilization"

Dear Mr. Holmes:

On behalf of Minnkota Power Cooperative, Inc., this letter is intended to provide our support for the Energy & Environmental Research Center's (EERC) proposed project entitled "Pathway to Low-Carbon Lignite Utilization," a proposal being submitted to the North Dakota Industrial Commission (NDIC).

As you well know, Minnkota is a non-profit wholesale electric G&T cooperative headquartered in Grand Forks, N.D. Minnkota recently had its 75th anniversary, beginning its operation in 1940. Eleven member-owned distribution cooperatives located in eastern North Dakota and northwestern Minnesota receive their electric energy from Minnkota under contractual relationships that extends through 2055. In addition, Minnkota serves as the operating agent for Northern Municipal Power Agency ("NMPA"), a municipal joint action agency that serves as an energy supplier for 12 municipal utilities located within the Minnkota service area. In total, the Minnkota/NMPA "Joint System" provides electricity to more than 143,000 residential and commercial member consumers spanning over 34,500 square miles.

Considering the nature and length of our obligation to meet the needs of our member owners, Minnkota is keenly interested and involved in continuing to assess and develop new technologies and solutions to support the lignite industry, as there is a significant need for development of a highly efficient generation cycle for the future of the industry in North Dakota. This proposal and the pathway to develop a lignite-based Allam Cycle, shows promise for our industry and our company.

We are providing this letter in support of the team comprised of ALLETE, Basin Electric, the Lignite Energy Council (LEC), 8 Rivers Capital, and the EERC, who are working toward further development and commercialization of this technology. We have confidence that the project will provide benefit to the State and the lignite industry, and we look forward to working with the project team on this development pathway in the future as it proceeds toward technology commercialization.

Sincerely,

Minnkota Power Cooperative, Inc.

Gerry Pfau
Senior Manager of Power Production

DENNIS JAMES
Director - New Technology

NORTH AMERICAN COAL CORPORATION

Direct Dial: (972) 448-5473
e-mail:dennis.james@nacoal.com

September 29, 2015

Mr. Michael Holmes
Director of Energy Systems Development
University of North Dakota
Energy & Environmental Research Center
15 North 23rd Street, Stop 9018
Grand Forks, ND 58202-9018

Subject: EERC Proposal No. 2016-0037, "Pathway to Low-Carbon Lignite Utilization"

Dear Mr. Holmes:

This letter is intended to provide The North American Coal Corporation's (NACoal) support for the Energy & Environmental Research Center's (EERC) proposed project entitled "Pathway to Low-Carbon Lignite Utilization," a proposal being submitted to the North Dakota Industrial Commission.

NACoal is keenly interested in and closely involved with the development of new technologies and solutions to support the lignite industry, as there is a significant need for development of a highly efficient generation cycle for the future of the industry in North Dakota. The EERC's proposal and the pathway to develop a lignite-based Allam Cycle show promise for our industry and our company.

We are providing this letter in support of the team comprised of ALLETE, Basin Electric, the Lignite Energy Council (LEC), 8 Rivers Capital, and the EERC, who are working toward further development and commercialization of this technology. We have confidence that the project will provide benefit to the State of North Dakota and the lignite industry, and we look forward to working with the project team on this development pathway in the future, as it proceeds toward technology commercialization.

Regards,

THE NORTH AMERICAN COAL CORPORATION

Dennis James
Director - New Technology

APPENDIX D

BUDGET JUSTIFICATION

BUDGET JUSTIFICATION

APPLICABLE TO FEDERAL/FEDERAL FLOW-THROUGH COST-REIMBURSABLE PROPOSALS

ENERGY & ENVIRONMENTAL RESEARCH CENTER (EERC)

BACKGROUND

The EERC is an independently organized multidisciplinary research center within the University of North Dakota (UND). The EERC is funded through federal and nonfederal grants, contracts, and other agreements. Although the EERC is not affiliated with any one academic department, university faculty may participate in a project, depending on the scope of work and expertise required to perform the project.

INTELLECTUAL PROPERTY

The applicable federal intellectual property (IP) regulations will govern any resulting research agreement(s). In the event that IP with the potential to generate revenue to which the EERC is entitled is developed under this project, such IP, including rights, title, interest, and obligations, may be transferred to the EERC Foundation, a separate legal entity.

BUDGET INFORMATION

The proposed work will be done on a cost-reimbursable basis. The distribution of costs between budget categories (labor, travel, supplies, equipment, etc.) and among funding sources of the same scope of work is for planning purposes only. The project manager may incur and allocate allowable project costs among the funding sources for this scope of work in accordance with Office of Management and Budget (OMB) Uniform Guidance 2 CFR 200.

Escalation of labor and EERC recharge center rates is incorporated into the budget when a project's duration extends beyond the university's current fiscal year (July 1 – June 30). Escalation is calculated by prorating an average annual increase over the anticipated life of the project.

The cost of this project is based on a specific start date indicated at the top of the EERC budget. Any delay in the start of this project may result in a budget increase. Budget category descriptions presented below are for informational purposes; some categories may not appear in the budget.

Salaries: Salary estimates are based on the scope of work and prior experience on projects of similar scope. The labor rate used for specifically identified personnel is the current hourly rate for that individual. The labor category rate is the average rate of a personnel group with similar job descriptions. Salary costs incurred are based on direct hourly effort on the project. Faculty who work on this project may be paid an amount over the normal base salary, creating an overload which is subject to limitation in accordance with university policy. As noted in the UND EERC Cost Accounting Standards Board Disclosure Statement, administrative salary and support costs which can be specifically identified to the project are direct-charged and not charged as facilities and administrative (F&A) costs. Costs for general support services such as contracts and IP, accounting, human resources, procurement, and clerical support of these functions are charged as F&A costs. The following table represents a breakdown by labor category and hours for technical staff for the proposed effort.

Labor Categories	Labor Hrs
Research Scientists/Engineers	9,409
Research Technicians	1,256
Senior Management	335
Technology Development Operators	1,430
Technical Support Services	287
	12,717

Fringe Benefits: Fringe benefits consist of two components which are budgeted as a percentage of direct labor. The first component is a fixed percentage approved annually by the UND cognizant audit agency, the Department of Health and Human Services. This portion of the rate covers vacation, holiday, and sick leave (VSL) and is applied to direct labor for permanent staff eligible for VSL benefits. Only the actual approved rate will be charged to the project. The second component is estimated on the basis of historical data and is charged as actual expenses for items such as health, life, and unemployment insurance; social security; worker's compensation; and UND retirement contributions.

Travel: Travel may include site visits, fieldwork, meetings, and conferences. Travel costs are estimated and paid in accordance with OMB Uniform Guidance 2 CFR 200, Section 474, and UND travel policies, which can be found at http://und.edu/finance-operations (Policies & Procedures, A–Z Policy Index, Travel). Daily meal rates are based on U.S. General Services Administration (GSA) rates unless further limited by UND travel policies; other estimates such as airfare, lodging, etc., are based on historical costs. Miscellaneous travel costs may include taxis, parking fees, Internet charges, long-distance phone, copies, faxes, shipping, and postage.

Equipment: A CO_2 compressor will be purchased to enable the EERC to pressurize CO_2 and produce a syngas or flue gas rich in CO_2 that can be used for testing various impurity removal schemes.

Supplies: Supplies include items and materials that are necessary for the research project and can be directly identified to the project. Supply and material estimates are based on prior experience with similar projects. Examples of supply items are chemicals, gases, glassware, nuts, bolts, piping, computers**,** data storage, paper, memory, software, toner cartridges, maps, sample containers, minor equipment (value less than $5000), signage, safety items, subscriptions, books, and reference materials. General purpose office supplies (pencils, pens, paper clips, staples, Post-it notes, etc.) are included in the F&A cost.

Subcontractor – 8 Rivers Capital, LLC: 8 Rivers Capital will provide support that is integrated throughout the entire scope of work. The scope includes investigating ways to decrease industries' carbon footprint by improving process efficiencies, switching to energy sources with lower carbon footprints, and capturing CO_2 produced for either beneficial reuse or for permanent storage.

Professional Fees: Not applicable.

Communications: Telephone, cell phone, and fax line charges are included in the F&A cost; however, direct project costs may include line charges at remote locations, long-distance telephone charges, postage, and other data or document transportation costs that can be directly identified to a project. Estimated costs are based on prior experience with similar projects.

Printing and Duplicating: Page rates are established annually by the university's duplicating center. Printing and duplicating costs are allocated to the appropriate funding source. Estimated costs are based on prior experience with similar projects.

Food: Expenditures for project partner meetings where the primary purpose is dissemination of technical information may include the cost of food. The project will not be charged for any costs exceeding the applicable GSA meal rate. EERC employees in attendance will not receive per diem reimbursement for meals that are paid by project funds. The estimated cost is based on the number and location of project partner meetings.

Professional Development: Fees are for memberships in technical areas directly related to work on this project. Technical journals and newsletters received as a result of a membership are used throughout the development and execution of the project by the research team.

Operating Fees: Operating fees generally include EERC recharge centers, outside laboratories, and freight.

EERC recharge center rates are established annually.

Laboratory and analytical recharge fees are charged on a per-sample, hourly, or daily rate. Additionally, laboratory analyses may be performed outside the university when necessary. The estimated cost is based on the test protocol required for the scope of work.

Graphics recharge fees are based on an hourly rate for production of such items as report figures, posters, and/or images for presentations, maps, schematics, Web site design, brochures, and photographs. The estimated cost is based on prior experience with similar projects.

Shop and operations recharge fees cover expenses of a designated group of individuals whose roles require specialized safety training and personal safety items. These individuals perform project activities in a pilot plant facility, remote location or laboratory and are also responsible for preserving a safe working environment in those areas. The rate includes such things as training for use of fall protection harnesses and respirators, CPR certification, annual physicals, protective clothing/eyewear, hazardous waste disposal fees, and labor for personnel to direct group activities. The estimated cost is based on the number of hours budgeted for this group of individuals.

Freight expenditures generally occur for outgoing items and field sample shipments.

Facilities and Administrative Cost: The F&A rate proposed herein is approved by the U.S. Department of Health and Human Services and is applied to modified total direct costs (MTDC). MTDC is defined as total direct costs less individual capital expenditures, such as equipment or software costing $5000 or more with a useful life of greater than 1 year, as well as subawards in excess of the first $25,000 for each award.

Cost Share: Cash cost share of $1,150,000 will be provided as follows: U.S. Department of Energy $900,000; ALLETE, Inc., $125,000; and Basin Electric Power Cooperative $125,000. ALLETE and Basin Electric will also provide in-kind of $25,000 each in the form of labor to support the review of key data developed in the project and assist with key decision points for moving the technology forward. 8 Rivers Capital will also provide in-kind cost share totaling $500,000 in the form of labor to develop a syngas combustor for the Allam Cycle. The total cost share from all sources is 53.5% for a total commitment of $1,700,000.

APPENDIX E

REFERENCES

REFERENCES

Allam, R.J.; Palmer, M..; Brown Jr. G.W. System and Method for High Efficiency Power Generation Using a Carbon Dioxide Circulating Working Fluid. U.S. Patent 8,596,075, Aug 31, 2010.

Allam, R.J. et al. Partial Oxidation Reaction with Closed Cycle Quench. U.S. Patent 8,776,532, Feb 11, 2012.

Allam, R.J.; Palmer, M.R.; Brown Jr., G.W.; Fetvedt, J.; Freed, D.; Nomoto, F.; Itoh, M.; Okita, M.; Jones Jr., C. High Efficiency and Low Cost of Electricity Generation from Fossil Fuels While Eliminating Atmospheric Emissions, Including Carbon Dioxide. *Energy Procedia* **2013a**, *37*, 1135–1149.

Allam, R.J. et al. *Allam Cycle Path to Coal*; Prepared for the UK Department of Energy and Climate Change, 2013b.

Allam, R.J. et al. New Power Cycle Provides High Efficiency and Lower Cost Electricity Generation from Coal while Eliminating Atmospheric Emissions. COAL-GEN, 2013c.

Allam, R.J. et al. The Oxy-Fuel, Supercritical CO_2 Allam Cycle: New Cycle Developments to Produce Even Lower Cost Electricity from Fossil Fuels Without Atmospheric Emissions. ASME Turbo Expo, 2014.

Forrest, B. et al. *Oxy-Lignite Syngas Fueled Semi-Closed Brayton Cycle Process Evaluation*; Prepared for Lignite Research Council, BNI Coal, Minnesota Power, and Dakota Gasification Company, in press.

Klara, J.M. IGCC: Coals Pathway to the Future. Presented at the Gasification Technologies Conference, Oct 4, 2006.

Murciano, L.T.; White V.; Petrocelli, F.; Chadwick, D. Sour Compression Process for the Removal of SO_x and NO_x from Oxyfuel-Derived CO_2. 10th International Conference on Greenhouse Gas Control Technologies, Elsevier; *Energy Procedia* **2011**, *4*, 908–916.

NET Power. NET Power Announces Launch of Breakthrough Clean Power Project, 2014, www.prnewswire.com/news-releases/net-power-announces-launch-of-breakthrough-clean-power-project-279279472.html (accessed Sept 2015).

Parsons Brinckerhoff. Electricity Generation Model: Update of Non-Renewable Technologies, 2013.

Stanislowski, J.J.; Laumb, J.D. Gasification of Lignites to Produce Liquid Fuels, Hydrogen, and Power. Presented at the Pittsburgh Coal Conference, Sept 2009.

Toshiba. Toshiba Signs Agreement to Develop Next Generation Thermal Power System with NET Power, Shaw Group and Exelon, 2012, www.toshiba.co.jp/about/press/2012_06/pr1502.htm (accessed Sept 2015).

APPENDIX F

OXY-LIGNITE SYNGAS FUELED SEMI-CLOSED BRAYTON CYCLE PROCESS EVALUATION REPORT

Oxy-Lignite Syngas Fueled Semi-Closed Brayton Cycle Process Evaluation

Evaluation of cycle performance, cost and development plan

Final Public Report, January 2014

DISCLAIMER OF WARRANTIES AND LIMITATION OF LIABILITIES

THIS DOCUMENT WAS PREPARED BY THE ORGANIZATIONS NAMED BELOW (THE "PREPARING ORGANIZATIONS"). NEITHER PREPARING ORGANIZATION, NOR ANY PERSON ACTING ON BEHALF OF ANY OF THEM:

(A) MAKES ANY WARRANTY OR REPRESENTATION WHATSOEVER, EXPRESS OR IMPLIED, TO ANY THIRD PARTY, (I) WITH RESPECT TO THE USE OF ANY INFORMATION, APPARATUS, METHOD, PROCESS, OR SIMILAR ITEM DISCLOSED IN THIS DOCUMENT, INCLUDING MERCHANTABILITY AND FITNESS FOR A PARTICULAR PURPOSE, OR (II) THAT SUCH USE DOES NOT INFRINGE ON OR INTERFERE WITH PRIVATELY OWNED RIGHTS, INCLUDING ANY PARTY'S INTELLECTUAL PROPERTY, OR (III) THAT THIS DOCUMENT IS SUITABLE TO ANY PARTICULAR USER'S CIRCUMSTANCE; OR

(B) ASSUMES RESPONSIBILITY TO ANY THIRD PARTY FOR ANY DAMAGES OR OTHER LIABILITY WHATSOEVER (INCLUDING ANY CONSEQUENTIAL DAMAGES, EVEN IF ANY REPRESENTATIVE OF A PREPARING ORGANIZATION HAS BEEN ADVISED OF THE POSSIBILITY OF SUCH DAMAGES) RESULTING FROM YOUR SELECTION OR USE OF THIS DOCUMENT OR ANY INFORMATION, APPARATUS, METHOD, PROCESS, OR SIMILAR ITEM DISCLOSED IN THIS DOCUMENT.

REFERENCE HEREIN TO ANY SPECIFIC COMMERCIAL PRODUCT, PROCESS, OR SERVICE BY ITS TRADE NAME, TRADEMARK, MANUFACTURER, OR OTHERWISE, DOES NOT NECESSARILY CONSTITUTE OR IMPLY ITS ENDORSEMENT, RECOMMENDATION, OR FAVORING BY EITHER PREPARING ORGANIZATION.

This document was prepared by:

8 Rivers Capital, LLC.

EPRI

ACKNOWLEDGMENTS

The following organization(s), prepared this report:

8 Rivers Capital, LLC
406 Blackwell Street
Crowe Building 4th Floor
Durham, NC 27701

Principal Investigators:
B. Forrest
X. Lu
M. McGroddy
J. Strakey
J. Fetvedt
D. Freed

Electric Power Research Institute
3420 Hillview Avenue
Palo Alto, California 94304-1338

Principal Investigators:
D. Thimsen
J. Phillips
J. Marasigan
H. Hendrix
A. Maxson
G. Booras
J. Shingledecker

Wright HT, Inc.
8976 East 35th Avenue
Denver, CO 80238

Principal Investigator:
I. Wright

DNV-GL
400 Techne Center Drive, Suite 100
Milford, OH 45150-2792

Principal Investigator:
B. Tossey

CONTENTS

***1* INTRODUCTION 1-1**

Objectives of the Study 1-1

Report Structure 1-1

***2* PERFORMANCE MODELING 2-1**

Design Basis for Modeling of Lignite Gasification 2-2

Use of Low-grade heat in the Allam Cycle 2-5

Case 1 and Case 2: Gasifier A Base Case and Optimized Case 2-7

Case 3 and Case 4: Gasifier B Base Case and Optimized Case 2-9

Case 5: Gasifier C Case 2-11

Case 6: Pre-combustion Acid Gas Removal (AGR) 2-12

AGR Process Description 2-12

The Claus Process 2-13

***3* LIGNITE DRYING SYSTEMS 3-1**

Summary 3-1

Background 3-3

Great River Energy Lignite Dryer 3-4

RWE WTA Fluidized-Bed Dryer 3-7

PSDF Fluid Bed Dryer System 3-9

***4* COST ANALYSIS 4-1**

Estimating Methodology 4-1

Capital Costs 4-1

Cost Estimate Basis and Classification 4-1

Reference Plant Costs and Capacity Factoring of Major Plant Systems 4-2

Operating & Maintenance Costs 4-4

Levelized Cost of Electricity 4-4

Results 4-6

Summary 4-7

1
INTRODUCTION

Objectives of the Study

At the beginning of the 21st century, increasing political and technological focus is being given to minimizing carbon dioxide (CO_2) emissions to the atmosphere. A significant source of CO_2 entering the atmosphere is from combustion of coal to generate electric power. The increased focus on the use of Carbon Capture and Storage (CCS) has been met with significant criticism because all technologies that have been developed to address this issue come with significant cost and efficiency penalties relative to state-of-the art fossil-fueled electricity generation technologies.

NET Power (Durham, NC) is bringing forth a novel oxy/gas-fired semi-closed Brayton power cycle (termed the "Allam Cycle") for co-production of bulk power and CO_2 suitable for enhanced oil recovery or other geological storage. The technology, invented and developed by 8 Rivers Capital and being commercialized by NET Power, produces high efficiency, low cost electricity, while generating storage-quality CO_2 as a by-product of normal operations. Where existing CCS technologies degrade efficiency and increase the cost relative to non-capturing coal systems, the Allam Cycle is expected to increase efficiency and decrease overall cost, while capturing nearly 100% of emissions.

Initial demonstration of the Allam Cycle will be fueled with natural gas but a coal syngas-fueled version of the power cycle is expected to be extremely competitive with non-capture, state-of-the-art, coal-fired facilities.

A study has been completed which evaluates the expected performance of the Allam Cycle technology when integrated with a bituminous coal syngas plant. The work reported here is conduct a similar analysis for plant performance when integrated with a lignite syngas plant taking into account the unique characteristics of lignite as compared to bituminous coal. The goal of this work is to design a coal-fired Allam Cycle integrated with an optimal existing lignite gasifier and to provide performance targets the system can be expected to achieve.

Report Structure

Following this Introduction, the report is organized as follows:

- **Section 2:** presents the results of an optimization study for gasifier integration with the Allam Cycle, as well as thermodynamic modeling results for the three leading gasification candidates. An analysis of their relative advantages and disadvantages when integrated with the Allam Cycle is also presented
- **Section 3:** As is identified in Section 2, the process of drying and preparing the lignite has a substantial impact on the overall performance of the system. This section further investigates available options for the drying and processing of lignite coals to the conditions required by the Allam Cycle, to investigate how the results of Section 3 might be further improved

2
PERFORMANCE MODELING

Based on an analysis of optimal integration of existing gasification technologies with the conditions of the Allam Cycle, cycle modelling was performed to provide an estimate of expected performance. For this report, three major gasification systems were modelled based on vendor-supplied data (where available) or data available in the public domain:

- Gasifier A: Dry-fed, oxygen-blown, entrained-flow gasifier with a full water quench
- Gasifier B: Dry ash, oxygen-blown, moving bed gasifier
- Gasifier C: Dry-fed, oxygen-blown, fluidized bed gasifier with a syngas cooler

For each of the systems above, both a base case, which utilizes un-modified vendor-supplied conditions, and an optimized case performances have been evaluated. The latter assumes specific modifications to the vendor-supplied data that better suit the operational characteristics of the integrated system. It should be noted that these modifications are believed to be within the existing capabilities of each gasification technology. The performance of each of these cases is summarized in Table 2-1.

Table 2-1
Comparison of Allam Cycle using different gasifier systems with Lignite-fired IGCC electric generating plants, with and without CO_2 capture[1] all figures on a HHV basis.

Energy Components	**Case 1** Allam Cycle (Gasifier A Base)	**Case 2** Allam Cycle (Gasifier A Optimized)	**Case 3** Allam Cycle (Gasifier B Base)	**Case 4** Allam Cycle (Gasifier B Optimized)	**Case 5** Allam Cycle Gasifier C	**Case 6** Gasifier A base case + pre-combustion AGR	**Case 7** NETL IGCC (Case L3A) (0% CO_2 Capture)	**Case 8** NETL IGCC (Case L3A) (90% capture)
Electric Output (MW)	283	287	179	265	289	273	543	467
Cold Gas Efficiency (%HHV)	81.7%	87.2%	83.4%	81.4%	79.6%	81.7%	80.5%	81.5%
Gross Turbine Output	67.3%	71.4%	61.3%	59.3%	66.4%	66.5%	47.1%	43.5%
Compressor and Pump Parasitic Power	-13.3%	-14.1%	-13.0%	-13.5%	-13.2%	-13.8%	-8.1%	-11%
BOP Parasitic Auxiliary Power	-9.3%	-9.2%	-23.3%	-8.8%	-9%	-9.6%	-1.4%	-2.5%
Net Electric Efficiency (%HHV)	**44.1%**	**47.4%**	**24.6%**	**36.5%**	**43.6%**	**42.5%**	**37.6%**	**30.0%**

[1] Cost and Performance Baseline for Fossil Energy Plants, Volume 3a: LOW Rank Coal to Electricity: IGCC Cases. DOE/NETL-2010/1399.

Design Basis for Modeling of Lignite Gasification

The coal-based Allam Cycle is capable of power generation with high efficiency and near 100% carbon capture as a natural by-product of the process. This cycle has the advantage of utilizing the same basic, high-efficiency, low-cost, semi-closed CO_2 cycle as the natural gas-fired Allam Cycle. However, rather than supplying the oxy-fuel combustor with natural gas, a coal-derived syngas generated by a conventional partial oxidation coal gasifier may be utilized. This process requires selection and integration of a suitable gasifier and additional processes for removal and treatment of coal-related impurities.

The coal feedstock selected for this study was a North Dakota Beulah Lignite specification[2]. It was assumed the feedstock would need to be dried from its 35%-38% "as-delivered" moisture content to an "as-fired" the level specified by the gasifier vendor.

All selected gasifiers employ a dry coal feed that utilizes CO_2 as the transport gas into the gasification chamber. Lignite drying is accomplished by using N_2 produced by the ASU that is pre-heated using low-grade heat available from the gasifier. N_2 is preheated using a conventional tube and shell heat exchanger. The heat required for moisture removal in the drying process was calculated to be 1830 Btu/lb of water removed from the "as-delivered" feedstock. System efficiency can be further enhanced by utilizing the more energy efficient lignite drying technologies. These can require 25% - 38% less energy per unit of water removed than conventional drying methods (1,250 to 1,350 BTU/lb of water evaporated, compared to 1,800 to 2,000 Btu/lb of water evaporated for drying methods such as rotary drum, flash, and belt dryers).

All gasification systems utilized in this study have also been well demonstrated for oxygen-blown operation. In comparison to a natural gas-fired Allam Cycle with equivalent thermal input, the ASU capacity is increased in the lignite syngas-fired cycle. The delivery of the O_2 is split between the gasifier and the combustion turbine of the power cycle. The produced syngas fuel is then purified with either hot-gas filtration (Gasifier C) or a full water quench (Gasifiers A, B) and subsequent water scrubbing stages to remove any ash or char particles, ammonia, chlorides, alkali metals, and any contaminants which could damage or cause blockages in the combustor, turbine or downstream heat exchangers. Compared to radiant or convective syngas coolers, the direct water quench offers several advantages. These include greater process simplification with a corresponding reduction in capital cost, higher reliability by avoiding the potential for deposition and plugging in syngas coolers due to condensation of contaminants, especially for the gasification of feedstock with high sodium content (e.g. ND Beulah Lignite), and the well-proven ability to scrub the syngas to high purity levels as needed to protect downstream components. In addition, the direct quench essentially freezes the syngas at the gasifier exit composition, thereby preventing degradation in its calorific value as a result of the exothermic water gas shift reaction that can continue to occur in a convective cooler. In contrast, a syngas cooler enables higher-level heat to be generated which could improve the overall performance of the integrated system. The benefits of the syngas cooler are investigated in Case 5.

[2] Benson, S., and Sondreal, E., "Gasification of Lignites of North America," 2010.

In the case of the full water quench, the resultant clean syngas will be in the temperature range of 200°F to 500°F and contain a significant amount of saturated steam. No shift reactions are employed which results in a higher cold-gas efficiency for the overall gasification process. The washed gas stream is then cooled to near ambient temperature against the low-temperature region of the high-pressure CO_2 recycle, which condenses the steam content and cools the fuel gas portion. A simple shell and tube heat exchanger is used to recuperate this low-grade heat back into the Allam Cycle. Exchanger tubes must be rated to withstand the high pressure of the recycle CO_2 which, given the temperatures involved, can be accomplished by common grades of steel. Recovered low-grade heat is utilized in both the primary cycle (as described in the following section) and to optimize processes associated with the gasification island (e.g. coal drying). This process of low-grade heat recovery provides a significant opportunity for optimization within the Allam Cycle process to maximize expected efficiency. Further detail on the ability of the Allam Cycle to utilize low-grade heat is provided below.

In the fluidized bed gasification system, a syngas cooler is used for high grade heat recuperation from the hot syngas exiting at 1600°F. This raw syngas stream is cooled to 650°F. The syngas then passes through a hot gas filtration system before entering a tube and shell heat exchanger that is used for low-grade heat recovery. As in the full water quench systems, this heat is used for pre-heating nitrogen stream for lignite drying, the low-temperature, high-pressure recycle CO_2 stream, and the cold cleaned syngas stream before injection into the combustor.

After heat recovery, the syngas fuel undergoes additional cooling to near ambient temperature. This serves a double purpose of minimizing the syngas water content and reducing its temperature prior to compression. The syngas then undergoes mercury removal before being compressed and delivered to the high-pressure combustion system.

In the post combustion clean-up case, the fuel gas contains all the coal and gasifier-derived, non-water condensable impurities in a reduced form, such as H_2S, COS, CS_2, and HCN. The unique feature of the Allam Cycle is that this fuel gas is burned in the combustor with an excess of pure oxygen so that the heating value of these components can be realized and they are all converted into their oxidised forms, which are predominantly CO_2, SO_2, SO_3, NO, NO_2 and H_2O. At the cold end of the plant, where water condenses in the cooling turbine exhaust stream, there exists liquid water, excess O_2, nitrogen oxides, and sulphur oxides at a pressure of about 30 bar and near ambient temperature. Under these conditions, and with enhanced water separation using scrubbing and appropriate retention times, the sulphur oxides are converted to sulphuric acid and a majority of the nitrogen oxides are converted to nitric acid[3]. The acid condensate is removed in the water separator and can be either sold as a by-product or used to produce gypsum for removal by reaction with limestone (this process is referenced herein as the "Lead Chamber Process").

Alternatively, conventional and well understood pre-combustion methods of sulphur removal (e.g. Selexol, Rectisol and MDEA) can be employed upstream of the combustor. In this study, Case 6 (below) is modelled with a Rectisol wash for acid gas removal (AGR), providing a

[3] Allam, R.J., Palmer, M., Brown, W., Fetvedt, J., Freed, D., Nomoto, H., Itoh., M, Okita, N., and Jones, C., "High efficiency and low cost of electricity generation from fossil fuels while eliminating atmospheric emissions, including carbon dioxide", Energy Procedia, 2012.

conservative estimate of the additional parasitic losses and cost associate with pre-combustion acid gas removal.

The remainder of the process is identical to the natural gas-fired Allam Cycle[4]. The turbine exhaust flow is cooled to below 60°C by the economizer heat exchanger, and then is further cooled to near atmospheric temperature in an ambient air cooler or with cooling water. This enables liquid water derived from fuel combustion to be separated, along with sulphuric and nitric acids as described previously. The remaining stream of predominantly CO_2 is compressed and pumped to the required high pressure and reheated in the economizer heat exchanger for return to the combustor. The CO_2 recycle compressor inlet pressure will be below the CO_2 critical pressure. In the recycled CO_2 compression system, a compressor is used to raise the pressure to a value suitable for creating a dense phase fluid with cooling water. The CO_2 is then cooled to near ambient temperature in the compressor after-cooler. The gas is condensed to a final specific gravity of 0.5 – 0.8. The predominantly CO_2 stream is then pumped to the high pressure required by the combustor. The net CO_2 product derived from the addition of fuel and oxygen in the combustor is removed from the high pressure stream; at this point, the CO_2 product is at high-pressures and high purities, ready for removal without requiring further compression. Figure 2-1 below illustrates a full water quench version of the coal-based Allam Cycle process.

[4] High Efficiency and low cost of electricity generation from fossil fuels while eliminating atmospheric emissions, including carbon dioxide. R.J. Allam et al. GHGT-11. Kyoto, Japan. 2012.

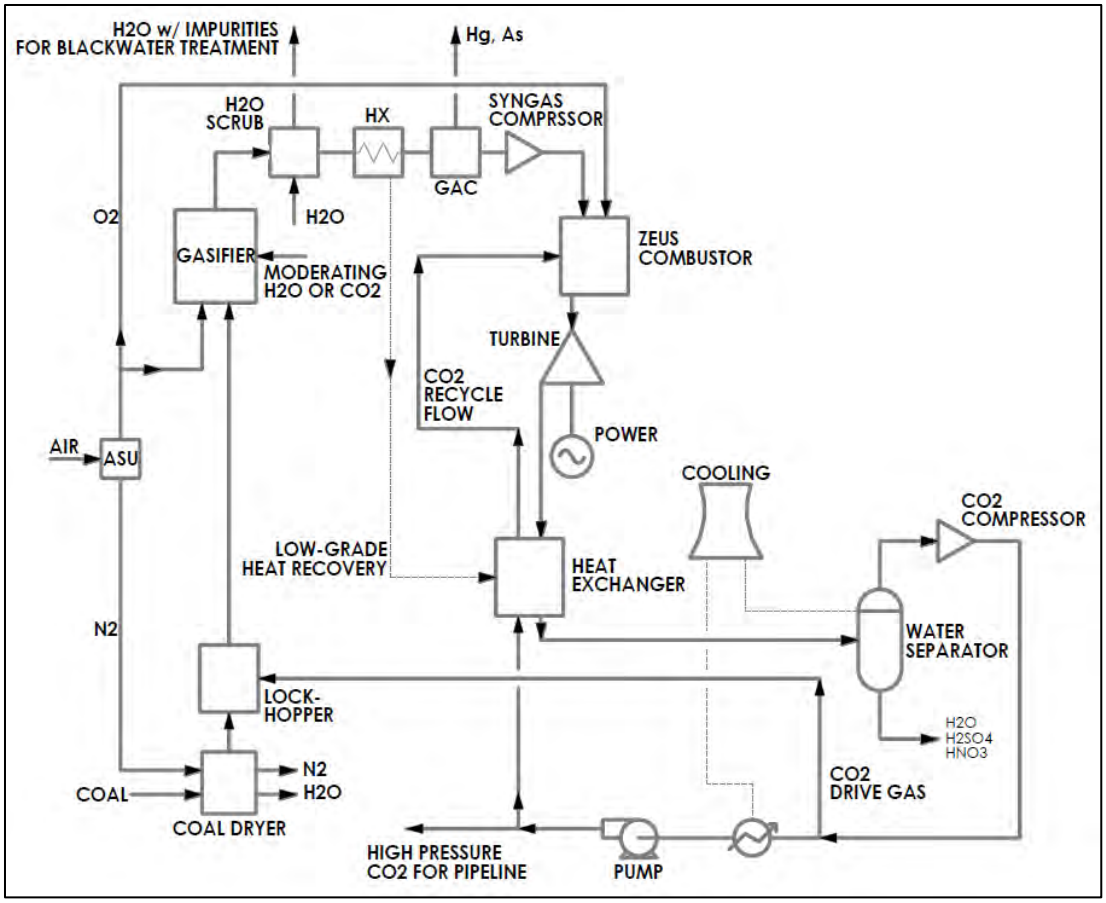

Figure 2-1 Coal-Based Allam Cycle Process Diagram

Use of Low-grade heat in the Allam Cycle

The addition of low-grade heat into the Allam Cycle takes advantage of the imbalance that exists between the heat rejected by the turbine exhaust and the heat required to reheat the CO_2 recycle stream in the main economizer heat exchanger. This imbalance is due to the very large increase in the specific heat of CO_2 in the high pressure recycle stream in the low-temperature region of the economizer heat exchanger as indicated in Table 2-2.

Table 2-2
Specific heat of CO_2 at pressures pertinent to the Allam power cycle[5]

Temperature	CO_2 at 30 Bar (kJ/kg-K)	CO_2 at 300 Bar (kJ/kg-K)
80°F (27°C)	1.18	1.95
170°F (77°C)	1.05	2.00
260°F (127°C)	1.02	1.90
350°F (177°C)	1.03	1.63
440°F (227°C)	1.06	1.47
620°F (327°C)	1.10	1.31
890°F (477°C)	1.17	1.23
1340°F (727°C)	1.24	1.28

This imbalance can be corrected by adding a significant quantity of externally generated, low-grade heat in order to raise the recycle CO_2 temperature at the low temperature end of the heat exchanger in a temperature range of 150°F to 500°F. For the natural gas system, tightly integrating with the compressors of the air separation unit (which provides oxygen to the system) is one potential area where this heat can be sourced. These compressors can be operated adiabatically with no inter-coolers; instead, they reject a portion of their heat into the power cycle. Although this increases the compressor power, the overall effect on the cycle is very positive; the adiabatic power input to the compressors is matched by an equivalent drop in the fossil fuel energy input needed by the system due to the reduction in the economizer heat exchanger hot end temperature difference through the coupling of heat rejection.

For the coal cycle, however, the low grade heat produced by cooling syngas post-water quench provides sufficient waste heat to be reintegrated into the cycle. In the current model of the Gasifier A base case, the recovered low-grade heat is used to preheat N_2 for lignite drying, preheat the lockhopper feed CO_2, preheat a side stream of recycle CO_2 before it is injected to high temperature heat exchanger and preheat the dry clean syngas stream before it is injected into the combustor. Currently it is assumed that 1830 Btu/lb of moisture removed is required to dry incoming lignite to 8% moisture. Several sources indicate that this requirement should be significantly less (1200-1800 Btu/lb). If further investigation indicates that less heat is required for lignite drying, more recycle CO_2 and cold syngas (post-compression and prior to entering the combustor) can be preheated to further improve the net efficiency.

It should be also noted that, in the case of entrained flow gasification systems with a water-cooled vessel, an additional, and significant, source of heat generated by the cooling screen steam. Utilization of this heat has not been considered in the modeling work done to date.

[5] Vargraftik NB. *Tables on the Thermophysical Properties of Liquids and Gases in Normal and Dissociated States*. 2nd ed. New York: Halsted Press; 1975, p. 185.

Case 1 and Case 2: Gasifier A Base Case and Optimized Case

The coal-based Allam Cycle efficiency is expected to far out-pace current approaches to coal generation in terms of both efficiency and costs. The discussion below presents results for oxygen blown, entrained flow gasifier for both a base and optimized cases.

The Base Case is modeled directly from data provided by the technology vendor with minimal modification. Further optimization presented in Case 2 includes reduction of the O_2 consumption to maintain the operating temperatures at the lower end of the range. It should be noted that the assumed oxygen purity by the vendor-supplied data was 95%, while 99.5% oxygen purity is required by the Allam Cycle. Increasing the O_2 purity to the required level while maintaining the same mass of O_2 injected, decreases the amount of N_2 acting as a moderator on the reactions and causes an increase in the gasifier operating temperature from about 2600 °F to 3183 °F.

Detailed modeling of base case was conducted based on the following parameters:

- Coal Type: ND Beulah Lignite (NETL, see Appendix A for coal specification)
- Plant Size: 283.3 MWe (net)
- Coal input: 293,843 lb/hr (633.8MWth)
- Ambient: ISO conditions
- Gasifier Operating Pressure: 42 bar
- Gasifier Operating Temperature: 3183°F

The results of Case 1 exhibit a gasifier operating temperature on the higher end of the operational range provided by the vendor. For the Gasifier A optimized case, oxygen consumption is reduced to drive the gasifier operating temperatures back to the lower end of this range, 2600 °F. This also reduces the portion of coal being combusted and yields more efficient coal gasification, increasing the cold gas efficiency from 81.7% (Case 1) to 87.2% (Case 2). This result must be confirmed with the vendor.

Table 2-3 summarizes the results of the modeling for Case 1 and Case 2. It should be noted that efficiencies do not include additional losses expected for coal handling and milling, slag handling and cooling tower fans as this data was not provided by the gasifier vendor. Representative data for a lignite-fired, entrained flow system was taken from the Case L3A IGCC system described in the US Department of Energy NETL Cost and Performance Baseline for Fossil Energy Plants (2011). This data indicates that these parasitics account for an additional efficiency loss of 0.25 – 0.50 percentage points [6]. Even with these losses, the coal-based Allam Cycle exhibits the highest efficiency of any lignite-fired system, with or without carbon capture, when integrated with an existing, commercially available gasifier. This is achieved with a water-quench design which exhibits the aforementioned advantages over syngas cooler designs. It should be noted that the heat required for lignite drying in this Base Case is

[6] Cost and Performance Baseline for Fossil Energy Plants, Volume 3a: LOW Rank Coal to Electricity: IGCC Cases. DOE/NETL-2010/1399.

1830 Btu/lb of removed moisture. As was previously mentioned, the net efficiency of Allam Cycle can be further improved if a more advanced lignite drying method is applied.

Table 2-3
Comparison of Case 1 and Case 2 performance of the Allam Cycle

	Case 1	Case2	NETL IGCC (Case L3A) (0% CO2 Capture)	NETL IGCC w/ capture (90% CO2 Capture)
Electric Output (MW)	283	287	543	467
Net Cycle Efficiency (%HHV)	44.1%	47.4%	37.6%	30.0%
Gasifier Cold Gas Efficiency (%HHV)	81.7%	87.2%	80.5%	81.5%
O2/ raw coal (mass ratio)	0.50	0.44	0.49	0.49
Operating temperature (°F)	3183	2610	N/A	N/A

Modeled syngas temperature, pressure, composition, CO/H_2 ratio and gasifier cold gas efficiency and thermal losses for Case 1 have been matched to data provided for Gasifier A. The gasifier was fed an input of 198,416 lb/hr of coal at 8% moisture and was generated by drying a raw coal input of 293,843lb/h (30.2% moisture) using reject nitrogen from the ASU. This input is scaled slightly from the "as-provided" vendor data to match the required mass flow rate of Toshiba turbine inlet for the Allam Cycle. This is done to reduce the scaling assumptions required for the costing analysis presented in Section 4.

The only integration between the gasifier island and the Allam Cycle in each case is the recuperation of low grade heat from the clean syngas stream (post quench and scrubbing) as it is cooled to ambient temperature. This heat is used to:

1) heat a side stream of recycle CO2 from the Allam Cycle,
2) reheat the compressed syngas before combustion,
3) pre-heat CO2 feed gas prior to use in the lockhoppers, and
4) heat the nitrogen generated by the ASU for drying of the lignite.

It should be noted that the vendor-supplied data was provided as generic and without any design or modification for optimization within the conditions of the Allam Cycle. Therefore Case 1 performance is expected to be a conservative estimate for what is achievable with a conventional commercially available, "over-the-fence" gasifier, as this data does not reflect any optimization of gasifier conditions and potential for integration with the Allam Cycle. Similarly, the analysis was conducted as ISO conditions rather than North Dakota conditions, which would provide increased efficiencies via lower ambient cooling temperatures.

For Case 2, oxygen consumption is limited to reduce the operating temperature to 2600 °F. This temperature represents the lower end of the range of operation provided by the vendor for bituminous coal, as well as the original specification that considered the use of 95% O_2 purity. This range takes into account the necessary margin on ash melting temperature to ensure

slagging is achieved. The high sodium content of the lignite considered in this study should further depress the ash melting temperature, possibly allowing for further reduction of operating temperature and further increase in performance. However, as the operating range on a lignite fuel was not available from the vendor, further reduction in temperature was not considered.

Case 3 and Case 4: Gasifier B Base Case and Optimized Case

Gasifier B is modeled based on a semi-empirical devolatilization[7] model supplemented with design data from gasifiers in operation. Moving bed gasifiers are counter-flow reactors. The ascending mixture of oxygen (or air) and steam is first pre-heated by the ash layer. The oxygen in the blast is quickly consumed by combustion with residual char at the top of the ash layer. The products of combustion along with accompanying steam moderator are cooled as they react endothermically with the char until a temperature is reached where the gas-char reactions cannot be supported. Residual heat in the ascending gas is used to devolatilize and then dry the feed solids. The counter-flowing solids are dried, devolatilized, gasified and residual char oxidized as they settle and are converted to the gas phase. In contrast to entrained flow gasifiers and fluidized bed gasifiers, there is no independent control of fuel and oxygen. Oxygen flow is controlled directly but fuel flow is not. Field experience has shown that the O2/fixed carbon ratio is relatively independent of coal type. The steam/O2 ratio is empirically determined to manage ash agglomeration in the combustion zone. Raw gas temperature leaving the gasifier is largely a function of the moisture content of the fuel entering the gasifier.

The raw syngas produced by char gasification mixes with the coal devolatilization products such as tars, oils and phenols and moisture produced during drying inside the gasifier. Therefore, the external lignite dryer employed for the entrained flow and fluidized bed gasification processes is eliminated by the Gasifier B system. The oxygen to fixed carbon ratio, steam to fixed carbon ratio, operating temperature and pressure, tar and oil production, and raw syngas temperature are modeled based on the semi-empirical data provided by the Electric Power Research Institute[8]. The raw syngas exiting the gasifier is then purified with a water scrubber to remove any tar, oil, phenols, ash or char particles, ammonia, chlorides, alkali metals, and any contaminants which could damage or cause blockages in the combustor, turbine or downstream heat exchangers. The syngas clean up and cooling process is designed, as in the Gasifier A cases, to recover low grade heat from the syngas stream into the Allam Cycle.

Table 2-4 shows the Gasifier B system performance results for both Case 3 and Case 4. The net system efficiency of Case 3 is only 24.6% HHV. The poor system performance can be attributed to two major causes:

1) The moving bed technology produces much more tar and oil compared to other gasifier types. According to the EPRI data, tar is produced at a rate of 0.012lb/lb-fuel and oil is produced at a rate of 0.002lb/lb-fuel. Tar and oil need be removed in the syngas cleaning process to prevent possible damage to downstream components. Therefore, part of the total lignite heating value will be lost in the tar/oil removal process and the total syngas heating value and turbine output will be less.

[7] Coal Devolatilizatoin in a Moving Bed Gasifier. EPRI, Palo Alto, CA: 1990. GS-6797.
[8] David Thimsen, personal communication

2) In order to maintain a low operating temperature to prevent slagging of the ash, a large amount of steam needs to be injected into the gasifier to control the combustion zone temperature. The recommended value of steam usage is assumed to be 1.332 lb/lb fuel based on field experience. In the Allam Cycle design case, of approximately 564 MW_{th} heat input, about 131 MW_{th} is required for generating this steam, as there is no steam cycle associated with the Allam Cycle. The integrated coal-based Allam Cycle can only provide approximately 50 MW of internally recovered low grade heat for steam generation. Therefore the other 80 MW required must be provided from outside the system and the addition of this heat has a detrimental effect on the overall system efficiency.

Given the poor performance of Case 3, Case 4 investigated increasing cold gas efficiency by using CO_2 as a moderator instead of steam. A conservative approach to investigating this alternative would be to replace the recommended water vapor in the gasifier with CO_2 in proportions that mirror the relative enthalpy changes in water vapor and CO_2 between about 500 °F and 2500 °F, shown in Table 2-5. Therefore, water vapor could be replaced by CO_2 at a ratio of about 2 lb CO_2 /lb-H_2O. To accomplish this, a portion of recycle CO_2 from the Allam Cycle is injected into the gasifier to control the combustion zone temperature. A comparison of this Case 4 performance to the steam moderated Case 3 is shown in Table 3-3. The system net efficiency increases from 24.6% HHV to 36.5% HHV.

Table 2-4
Comparison of Case 3 and Case 4 performance

	Case 3	Case 4
Electric Output (MW)	179	265
Thermal Efficiency (%HHV)	24.6%	36.5%
Gasifier Cold Gas Efficiency (%HHV)	83.4%	81.4%
O2/coal (mass ratio)	59.3%	61.3%
Compressor and Pump Parasitic Power	-13.0%	-13.5%
Plant Parasitic Auxiliary Power	-23.3% (majority for steam generation)	-8.8%

Table 2-5
Enthalpy change of H_2O and CO_2 at the temperature range of 500-2500 F

	Enthalpy change 500°F – 2500°F (450 psia)	Relative amounts to achieve the same enthalpy change
CO_2	594 Btu/lb	1.97
H_2O	1168 Btu/lb	1.00

The advantage of CO_2 moderation as compared to steam moderation is that the large quantity of low grade heat required for steam generation is not needed in the CO_2 moderation case, as CO_2 at the required conditions is readily available from the Allam Cycle whereas steam is not. This is a key reason for the performance improvement.

Case 5: Gasifier C Case

In the Allam Cycle, as received coal is crushed to the required size (~ 400 microns) and fed to a system of fluidized bed coal dryers, the dryers utilize low-grade process heat to dry coal to a 25.9% moisture content. Lignite drying design uses N_2 produced by the ASU that is pre-heated using low-grade heat available from the gasifier, as with the other Cases. N_2 is preheated using a conventional tube and shell heat exchanger. The heat required for moisture removal in the drying process was calculated to be 2,451 Btu/lb of water removed from the "as-delivered" feedstock. This value is significantly higher than in the Gasifier A case since, although both cases assume the temperature of the dried lignite is maintained at 135°F, significantly less moisture is removed in the Case C, increasing the ratio of Btu/lb of water removed.

Partially dried, pulverized coal, oxygen and steam are fed to the gasifier near the mixing zone where they contact the circulating solids. Coal gasification reactions take place in the resulting fluidized bed operating in the high velocity 'transport regime'. The flow of oxygen is carefully controlled to limit carbon combustion within the gasifier. The mole ratio of O_2/C is assumed to be 0.336 in this study. Steam is added to the gasifier, both as a reactant and as a moderator to control the reaction temperature. For this study, the mole ratio of steam/C is 0.8 to maintain the gasifier operating temperatures at 1600°F for the lignite case. The operating temperature range of Gasifier C is between 1600°F and 1900°F. The feedstock used for this modeling is a high sodium ND lignite, which reduces the ash melting temperature. Therefore, in order to maintain the operating temperature below than ash melting temperature, 1600°F is assumed to be safely outside of the required temperature margin. In addition, these operating temperatures were chosen to ensure the highest possible carbon conversions are attained. This is possible because, for a given coal, the maximum carbon conversion in the gasifier remains constant over a range of temperatures and only drops when the temperature is further reduced.[9] Therefore, the gasifier operating temperatures selected for this study represents the lower-end of the temperature range for which carbon conversions are uncompromised for the specified lignite.

As opposed to the previous water-quenched cases, the raw syngas exiting the gasifier at the temperature of about 1600°F is sent to a syngas cooler. The main purposes of the syngas cooler are: (1) to recover high-grade process heat from syngas leaving gasifiers, and (2) to provide necessary superheat for moderation steam generated within the syngas cooler.

In this study the superheated steam generated in the syngas cooler is sent to a simple shell and tube heat exchanger to be cooled to 650°F, and then sent to the gasifier. In the tube and shell heat exchanger, a low-temperature, high-pressure recycle CO_2 stream, a cold nitrogen stream

[9] Dorminey, j., Northington, J., Leonard, R., and Yongue, R., "Lignite Gasification Testing at the Power Systems Development Facility," 34th International Technical Conference on Clean Coal and Fuel Systems, 2009.

used for lignite drying, and a cold cleaned syngas stream are heated up against the superheated steam. The raw syngas exiting the syngas cooler at 650°F flows through a hot gas filtration system that removes remaining particulate matter as fine ash. Removing fine particulates from syngas is an integral part of any gasifier system as they can foul or corrode downstream equipment, reducing performance or causing equipment failure. The syngas exiting the filter is sent to the tube and shell heat exchanger mentioned above for low grade heat recuperation. A water scrubber is used to remove the remaining ammonia, chlorides, fluorides, trace metals and water contents from the syngas exiting the heat exchanger. The syngas exiting the water scrubber is at a temperature below 95°F for the mercury removal. The cleaned syngas is sent into the tube and shell heat exchanger to heat up to around 500°F against superheated steam and hot raw syngas before being injected into the combustor.

In the Gasifier C system, the syngas cooler is used for high grade heat recuperation from hot syngas at 1600°F, and the tube and shell heat exchanger is used for low grade heat recuperation from the syngas after ash filtration. The heat recuperated from raw syngas is used for generation of moderator steam, and also for pre-heating the cold nitrogen stream for lignite drying process, the low-temperature, high-pressure recycle CO_2 stream, and the cold cleaned syngas stream before injecting into the combustor. This extremely efficient heat recovery process in the gasification cycle contributes to the high performance of Gasifier C. The net system efficiency of is 43.6% HHV, which is shown in Table 2-6.

Table 2-6
Comparison of Gasifier C performance to Gasifier A.

	Case 1	Case 5
Electric Output (MW)	283	289
Net Cycle Efficiency (%HHV)	44.1%	43.6%
Gasifier Cold Gas Efficiency (%)	81.7%	79.6%
Operating temperature (°F)	3183	1650
Temperature of hot syngas heat recuperation (°F)	413	1650

Case 6: Pre-combustion Acid Gas Removal (AGR)

AGR Process Description

Considering the potential technology risk of the Lead Chamber Process in the Allam Cycle, the alternative of a complete pre-combustion acid gas removal (AGR) process has been investigated.

While several commercial methods exist for the upstream removal of sulphur (Selexol, Purisol, Rectisol, etc.), the Rectisol wash was selected for further investigation. This was due to the fact that the low temperature refrigeration of methanol (-40°C) for optimum absorption requires

higher capital cost (approximately 5% of the material in a Rectisol plant must be stainless steel) and higher parasitic energy than competitive processes. Therefore this process presents the worst case scenario in terms of additional system efficiency and capital cost penalty incurred by the coal-based Allam Cycle.

For the purposes of Case 6, the Rectisol process is modelled as part of the base Gasifier A case (Case 1) and the performance of upstream clean-up is compared to Case 1, employing the Lead Chamber process. Primary utility consumption assumptions for modelling of the Rectisol process are summarised in Table 2-7.

Table 2-7
Primary utility consumption assumptions for modelling of the Rectisol process[10]

Total Electricity Use:	0.267 kWh/lbmol syngas
Total Steam Use:	1722 BTU/lbmol syngas
Minimum Steam Level:	Saturated steam at 65 psia

The steam use is calculated based on the required heat duty of the Rectisol process, which is 1722 BTU heat duty/dry lbmol of syngas. The steam requirement is calculated by the following equation:

$$m_{S,R,i} = \left(\frac{1.441 lbSteam}{lbmol.dry.syngas}\right) M_{D,R,i}$$

where $M_{D,R,i}$ = Inlet dry syngas molar flow rate, lbmol/hr

$m_{S,R,i}$ = Amount of steam required, lb/hr

S = steam, D = dry syngas, R = Rectisol, i = inlet

Part of heat required for steam generation is provided by partial H_2S combustion in the sulphur recovery process, while the rest of steam is assumed to be generated by the cooling wall of Gasifier A. The H_2S content in the cleaned syngas post AGR process is 0.1 ppm, CO_2 in the cleaned syngas is about 1.5 mol%. The recovered CO_2 from Rectisol process can be compressed, then either mixed with the Allam Cycle recycle CO_2 stream or sent to CO_2 storage pipeline.

The Claus Process

The H_2S leaving in the acid gas from the AGR system is converted to elemental sulphur in the sulphur recovery unit (SRU). This technology is based on the Claus process involving the partial oxidation of the H_2S to sulphur gas and steam.

The oxygen-blown Claus process was originally developed to increase capacity at existing conventional Claus plants and to increase flame temperatures of low H_2S content gases. Although oxygen enrichment has many benefits, its primary benefit for lean H_2S feeds is a stable

[10] Pickett M., "Modeling the Performance and Emissions of British Gas/Lurgi-based Integrated Gasification Combined Cycle," Master thesis North Carolina State University, 2000.

and higher furnace temperature (2,900°F to 3,000°F). Another advantage of the oxygen-blown Claus process is that the tailgas could potentially be recycled to the gasifier, thereby obviating the need for a tailgas treatment process. Due to these advantages, and the fact that the Allam Cycle already requires an ASU, the oxygen-blown Claus process was selected in this study.

Compared to the Allam Cycle with post-combustion AGR (via the Lead Chamber Process), pre-combustion H_2S removal drops the overall plant efficiency drops from 44.1% HHV to 42.5% HHV. The major parasitic load is electricity required for the refrigeration of methanol in the Rectisol process. The heat required for steam generation used in the steam-stripped reboiler can be derived from the Claus plant and gasifier. Since the tail gas from Claus plant is recycled back into the AGR system, recovered CO_2 from Rectisol process can be sent to the storage pipeline or recycled back into NP system, it is assumed that no carbon is lost during the Rectisol process.

3
LIGNITE DRYING SYSTEMS

Summary

With the exception of one power plant in the US and one in Germany, drying of lignite is not practiced at the scale envisioned for the commercial-scale Allam Cycle. Even that one power plant in the US does not dry lignite to the level needed for some of the gasifiers considered in this report. Nevertheless, the experience of commercial-scale coal gasifiers in drying other coals has shown that deep drying of coal is feasible and extending that experience to lignite is not expected to be a major technical challenge. In fact the Kemper County IGCC, which is scheduled to begin operating in late 2014, will dry lignite to the level required by a TRIG gasifier.

The most significant challenge when it comes to drying lignite is to find ways to do it without resorting to use of high value energy sources such as syngas that could otherwise be used to generate electric power. Several organizations have been developing technologies that use low value energy streams to dry lignite. Three of the organizations which are the most advanced in terms of commercial development are Great River Energy (GRE), RWE, and Schwing-Bioset. The most appropriate technology for the Allam Cycle to use in the lignite system will depend on which gasification technology is selected. Entrained flow gasifiers favor drying systems which can achieve deep moisture removal (RWE and Schwing-Bioset), while fluidized bed gasifiers would benefit from systems that use low temperature heat while achieving a modest amount of moisture removal (GRE). Moving bed gasifiers do not require a drying system for the lignite.

It is difficult to assign an appropriate "figure of merit" for lignite drying systems. The deeper the moisture removal, the more thermal energy is needed per kg of water removed. Consequently, drying systems that have modest moisture removal capabilities will always have lower energy consumption on a per kg H_2O removed basis than systems that remove more water. However, one has to look at the entire power plant to ascertain the overall impact of the drying system on the process. For example, by using more heat to remove more water the gasification system will have a higher cold gas efficiency which should translate to higher power output in the Allam cycle. Section 2 addresses these overall system impacts. This section assesses the technology readiness of three candidate drying systems. Those three systems are summarized in Table 3-1 Summary of Three Lignite Drying Technologies and are each described in detail in the sub-sections below.

Table 3-1
Summary of Three Lignite Drying Technologies

Technology Owner	Great River Energy (GRE)	RWE	Schwing-Bioset
Technology Name	DryFining™	WTA	Closed Loop Coal Drying
Drying Method	Waste heat-driven fluidized bed dryer combined with ash reduction	Steam-driven fluidized bed dryer with vapor recompression	Waste heat-driven fluidized bed dryer with inert gas loop and water recovery
Heat Source	Hot water from steam turbine condenser	Low pressure steam	Hot water from other processes
Commercial status	Installed at commercial scale	Installed at commercial scale	Under construction at commercial scale
Largest installation	8 x 125 ton/hour lignite dryers	One train at 121 ton/hour	6 x 100 ton/hour under construction, 6.6 ton/hr pilot unit at PSDF in operation
Applicable for Use with Allam Cycle?	Yes, but would need to recover heat from gasification process rather than steam turbine condenser	Possible, but would require production of low pressure steam in gasification heat recovery train	Yes
Product Improvements			
Moisture Content:			
Wet Fuel (% wet basis)	37%	55%	44%
Dried Fuel (%, wet basis)	28%	12%	21%
Moisture Removed (%)	34%	89%	66%
HHV increase (%)	14%	96%	41%
Thermal use (Btu/lb fuel @ temperature)	N/A	N/A	1250-1350 @ 250°F-350°F
Ash Removed (%)	N/A	N/A	N/A
S Removed (%)	Up to 40%	N/A	N/A
Hg Removed (%)	12% up to 50%	N/A	N/A

Notes:

1. GRE Moisture reduction is from full scale test reports and is limited by the application. Reductions in moisture content greater than those indicated are likely if sufficient thermal resources are available. This is likely to be true for all three technologies.
2. GRE and RWE thermal use (at comparable temperature) is likely to be similar to that indicated for Schwing-Bioset.
3. Ash, S and Hg removal will depend greatly on fuel ash characteristics and forms of Hg in the fuel.

Background

Lignite is a term applied to mined, carbonaceous fuels that have a wet basis calorific value less than 8,300 Btu/lb (19 MJ/kg). (If the fuel is unconsolidated, it is sometimes termed "Brown Coal".) Lignite-fueled steam-electric power plants are common and lignite handling systems are a relatively mature technology. These handling systems must be designed to deal with the unique features of lignite:

- High moisture content – wet lignite is a 'sticky" material and silos, conveyors and other handling equipment must be designed for this characteristic.
- Friability – dry lignite is a friable material and will be easily suspended in air as a dust cloud. This dust cloud is a respiration hazard, an explosion risk, and blight on the plant landscape. Handling equipment must be designed to suppress and recover the dust produced by the lignite-using process.
- Combustibility – lignite is a fire hazard as well as an explosion hazard. Handling facilities must be designed to prevent fires and explosions as well as to mitigate the effects of fires and explosions if and when they occur.

The most notable feature of lignite is its high moisture content, generally greater than 30% (wet basis). This high moisture content is an undesirable feature for any thermal use of lignite (including gasification) as evaporating the water imposes a significant heat load on the thermal process; heat that is difficult to recover in a useful fashion on the back end of the process.

Entrained flow lignite gasification processes such as that proposed here are, essentially, partial combustion processes. The temperature achieved during partial combustion must be sufficiently high to maximize conversion of solid carbon to gas-phase species. Feeding dry lignite to the gasifier reduces the amount of feed that must be fully oxidized to maintain the required gasifier temperature. This results in less CO_2 production in the gasifier and more H_2 and CO production with correspondingly higher syngas calorific value, all desirable ends.

There are, however, practical limits in reducing lignite moisture content:

- The friability of lignite increases as its moisture content decreases. The practical result is that handling dry lignite produces significant quantities of dust.
- Dry lignite dust is a very reactive fuel in the presence of air and is an explosion hazard as well as a nuisance.

The lignite preprocessing systems required for the entrained flow gasification system proposed here must be designed to deliver dried, pulverized lignite to the gasifier lock hoppers at which point they are handled by the gasifier island. The most notable feature of the lignite pre-processing is the drying process. The other features of the lignite pre-processing system support the dryer and transport of the fuel.

Heated air drying of granular materials is widely employed and is suitable for drying lignite. The drying capacity of heated air depends on both the temperature and the moisture content of the air which comes into contact with the wet lignite. ("Air" is used here generically. The lignite syngas-fueled plant proposed here utilizes nitrogen instead of air to avoid the risk of dryer fires/explosions but the differences in drying performance are minimal; air is 78% nitrogen.) The

heated air evaporates the water contained in the lignite and sweeps the water vapor out of the dryer. Due to a number of physical and chemical effects, the thermal energy required to evaporate water from coal and lignite is slightly higher than that which would be required to evaporate free water at the same temperature[11]. Similarly, the efficiency of utilizing the thermal energy in the dryer will be a function of:

- Air inlet conditions – dryer, warmer air increases efficient use of thermal energy
- Air to coal rate: – lower air to coal rate reduces thermal losses to the drying air exhaust

The most efficient dryer design will employ minimum air flow and maximize heat transfer to the air prior to the air entering the dryer.

A summary of the performance of several drying technologies is given in Table 5-1.

The Great River Energy and Schwing Bioset fluidized bed lignite dryers described below are typical deployments of heated air lignite drying. The RWE drying technology described below also uses a fluidized bed, but the fluidizing medium is steam rather than air.

Great River Energy Lignite Dryer

Great River Energy (GRE) captures and reuses unit waste heat at its Coal Creek Station in Underwood, North Dakota, to supply warm water and warm air to a fluidized bed lignite dryer as shown schematically in Figure 3-1 which depicts one of several thermal configurations developed for the process which GRE has branded DryFining™.[12] All of the lignite burned at the Coal Creek Station is dried by this process since its implementation and start-up in 2009.

Performance obtained from a DryFining prototype dryer is shown in Figure 3-2. The system installed at Coal Creek Station was designed to reduce fuel moisture content by approximately 9 percentage points from 38% to 29%. The DryFining process is capable of drying lignite to a much lower moisture content as has been shown at pilot scale, however, since the Coal Creek Station boilers were designed to burn lignite with 37% moisture, 29% moisture is the limit in drying that can be tolerated by without causing mass and heat flow imbalances in the boiler. To achieve deeper moisture removal, the fluidized bed dryers would have to operate at higher drying temperatures than are used at Coal Creek. EPRI believes a custom-designed DryFining process could produce lignite which would meet the specification of the gasification technologies examined in this study. Dry lignite was sent by GRE to Siemens in 2007 for testing in their gasifier with good results[13].

---

[11] *Condition of Water in Coals*. A.W. Gauger. Chemistry of Coal Utilization, V1. J. Wiley and Sons, New York. 1945.

[12] C. Bullinger, M. Ness, and N. Sarunac, "Coal Creek Prototype: Fluidized Bed Coal Dryer," 31st International Conference on Coal Utilization and Fuel Systems, Clearwater, FL, May 21–25, 2006.

[13] C. Bullinger, Great River Energy, personal communication, January 2014.

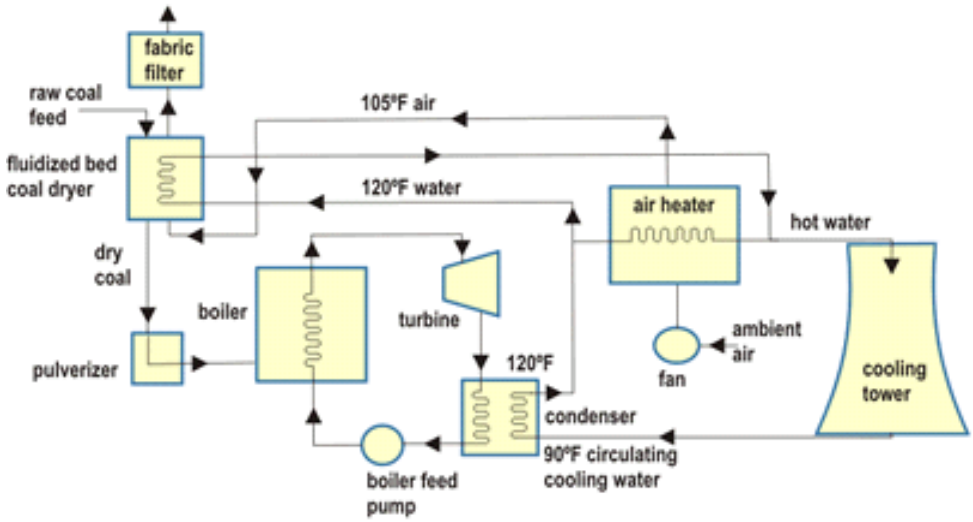

Figure 3-1
Simplified Schematic of Great River Energy Dryer

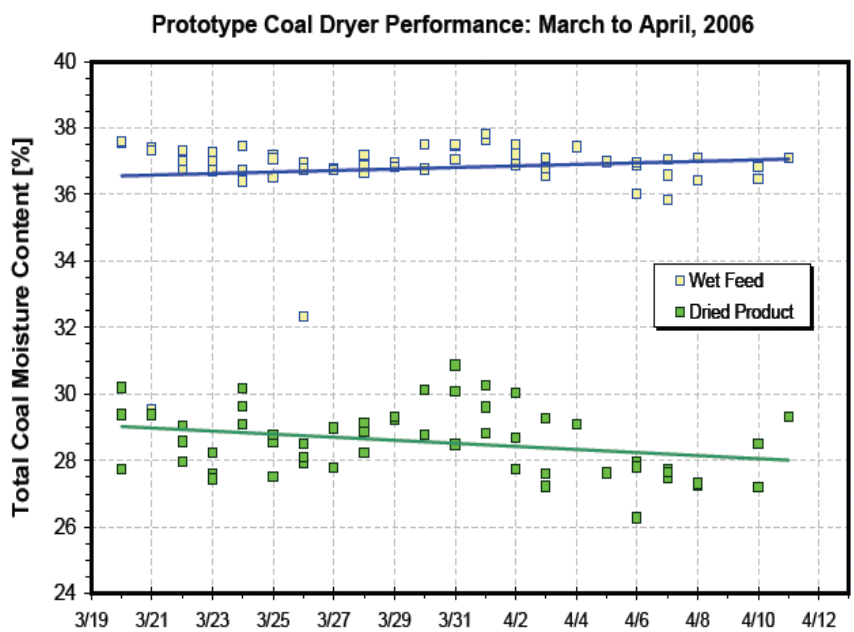

Figure 3-2
Reduction of Moisture at Great River Energy's Coal Creek Station

Early performance test results are shown in Table 3-2 for the full unit. These indicate that with just one pulverizer using dried coal, the stack flow rate from the unit decreased by 1%, boiler efficiency increased 0.37 percentage points, pulverizer power consumption decreased 3.3%, SO_X emissions fell 2%, NO_X emissions decreased 7.5% (because drier coal allowed adjustments to burner air flows that lowered NO_X production), and CO_2 emissions decreased 0.4%.

Table 3-2
Improved Unit Performance at the Coal Creek Station (One of Seven Pulverizers Receiving Dried Coal)

Parameter	**Units**	**Coal Dryer** ***In Service***	**Coal Dryer** ***Out of Service***	**Change**
Gross Power Output	MW	589	590	–
Total Coal Flow Rate	klb/hr kg/s	953 120	972 123	-2.02%
Dried Coal	% of Total	14.62	0.00	
Specific Pulverizer Work	kWh/klb *J/kg*	4.09 9.01	4.29 9.46	-4.65%
Total Pulverizer Power	kW	4057	4206	-3.53%

The full commercial application includes four drying modules supplying all eight pulverizers. Great River Energy has measured NO_X reduction exceeding 20%, SO_X reduction exceeding 40%, and mercury reduction of nearly 40%. With net heat rate decreasing by 2.85%, net CO_2 emissions per kWh decreased by about 3%.

Figure 3-3 shows the Coal Creek Station with the DryFining dryers in operation during the middle of the winter. Moisture removed from the lignite is vented from the four smaller stacks at the boiler roof. The full installation consists of eight (8) dryer modules serving sixteen (16) lignite mills drying 7 million tons per year.

Figure 3-3
DryFining Dryers in Operation at Great River Energy Coal Creek Station

RWE WTA Fluidized-Bed Dryer

RWE steam-electric units in western Germany burn wet lignite whose moisture content is around 55 percent but can be as high as 65 percent. RWE has developed a fluidized bed lignite dryer they term WTA (Wirbelschicht-Trocknung mit interner Abwärmenutzung, fluidized-bed dryer with internal waste heat utilization)[14]. The lignite is fluidized at around 110°C (230°F) by slightly superheated steam and the energy for drying is provided by steam condensing inside tubes immersed in the fluidized bed. The technology is described in more detail in another EPRI report[15].

The overall process arrangement is shown in Figure 3-4
. The raw lignite with a top size of 80 mm (~ 3 inches) enters the first of two hammer mills in series and is reduced to the feed size, either with a top size of 6 mm or 2 mm (0.24 or 0.08 inches). The milled raw lignite is conveyed to an overhead hopper and metered into the dryer through a rotary valve into a chute rotating in the dryer freeboard.

[14] Ewers, J., et al, "The Development of Pre-Drying and BoA-Plus Technology", VGB Conference, "Power Plants in Competition" Cologne, March 19th and 20th, 2003.
[15] *Operating Experience, Risk, and Market Assessment of Clean Coal Technologies: 2008*. EPRI, Palo Alto, CA: 2008. 1015679.

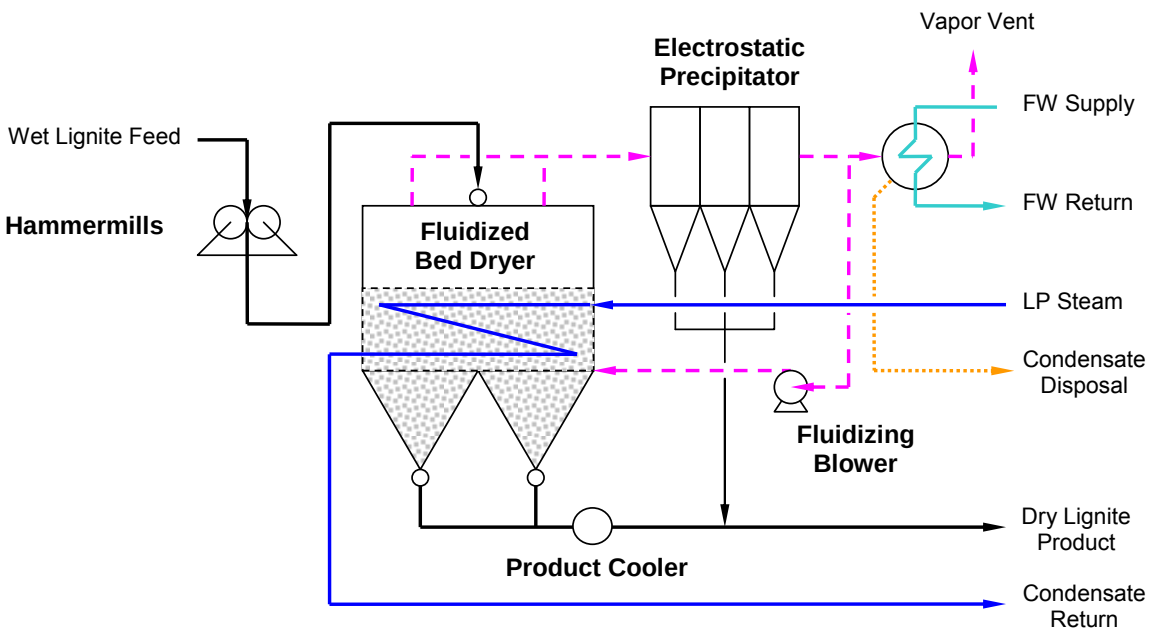

Figure 3-4
Schematic of WTA Lignite Dryer

The dryer can be divided into three sections vertically:

- A freeboard space through which the raw feed falls before entering the bed and where coarse solids disengage from the fluidizing vapor.
- The bubbling bed region where heat transfer tubing is immersed in a bed of lignite fluidized with recycled product vapor injected through sparger nozzles. Dryer operation is controlled according to an experimentally-determined curve relating operating temperature to lignite exit moisture. This drying curve is different for different fuels. Low pressure steam for heating is provided by turbine extraction or other convenient source.
- Dried solids pass through the gaps between the sparger pipes into the hopper section through which the dried lignite passes to the exit.

The lignite leaves the dryer through rotary valves at the hopper exits. The product is cooled in a vibrating plate cooler and by conveying air that takes the product to a storage silo. The dusty, moist conveying air is discharged to atmosphere through a bag house and the dust collected is returned to the product stream. Dust carried overhead by the fluidizing vapor is removed in an ESP and the solids returned to the cooled coarse solids stream leaving the foot of the dryer.

A small portion of the cleaned vapor leaving the ESP is compressed for recirculation as the fluidizing medium. Most of the cleaned vapor is condensed to heat steam generator feedwater or other thermal load. Non-condensibles in the vapor are vented.

The WTA process can dry the feed to moisture contents as low as about 12%. This limit is imposed to protect against self-ignition of the dry, dusty product.

16 hours is required on cold start to warm the dryer using the steam trace heating. The initial bed is dried lignite retained from the previous run and nitrogen is used for start-up fluidization. As

wet lignite is fed and steam is introduced to the heating circuit to maintain bed temperature, evaporated water vapor replaces nitrogen in the recycle fluidization loop and the start-up nitrogen is vented.

Two major variants of this base design are anticipated by RWE:

- When the moisture content of the feed is greater than about 55%, the overhead vapor is sufficient to provide the thermal demand of the dryer. In this case, the overhead vapor can be recompressed and used in lieu of the imported extraction steam. The imported steam load is replaced by a modest increase in auxiliary power for the steam compressor.
- A low-cost variant is anticipated where in the ESP is replaced by cyclones. In this case, the product vapor is vented and no heat is recovered to feedwater.

The commercial module size that RWE has developed has the following characteristics:

- Production capacity is approximately 110 tonnes per hour (121 tons per hour) at 12% moisture content. The module would provide sufficient fuel for 150-200 MWe. Multiple modules would be required for larger plants.
- Nominal inlet moisture content up to approximately 55%. Import steam use depends on moisture removed. Aggregate auxiliary power use is approximately 3 MWe. RWE has not published any information on whether the dried lignite has decreased the power used by the pulverizers, so the overall impact on auxiliary power is unknown.
- Installation size is 70 m x 25 m and the structure is 40-m tall (230 ft. x 82 ft. x 131 ft.).

PSDF Fluid Bed Dryer System[16]

The Power System Development Facility (PSDF), a US Dept. of Energy research facility operated by Southern Company Services, has a drying system specifically built for drying lignite to be fed to the pilot-scale TRIG gasifier at the PSDF. The PSDF Fluid Bed Dryer System is a prototype for the commercial-scale lignite drying system being built at Mississippi Power's Plant Radcliffe IGCC in Kemper County, Mississippi.

The PSDF system was manufactured by Schwing Bioset. Construction and installation was completed in March 2008, and the initial commissioning was completed in May 2008. This coal drying system exhibits a high coal drying efficiency, with N_2 used as the coal drying and fluidization media. Figure 3-5 is a photograph of the fluid bed dryer system showing the major components.

[16] Whole sections of this description are taken from: Dorminey, j., Northington, J., Leonard, R., and Yongue, R., "Lignite Gasification Testing at the Power Systems Development Facility," 34th International Technical Conference on Clean Coal and Fuel Systems, 2009.

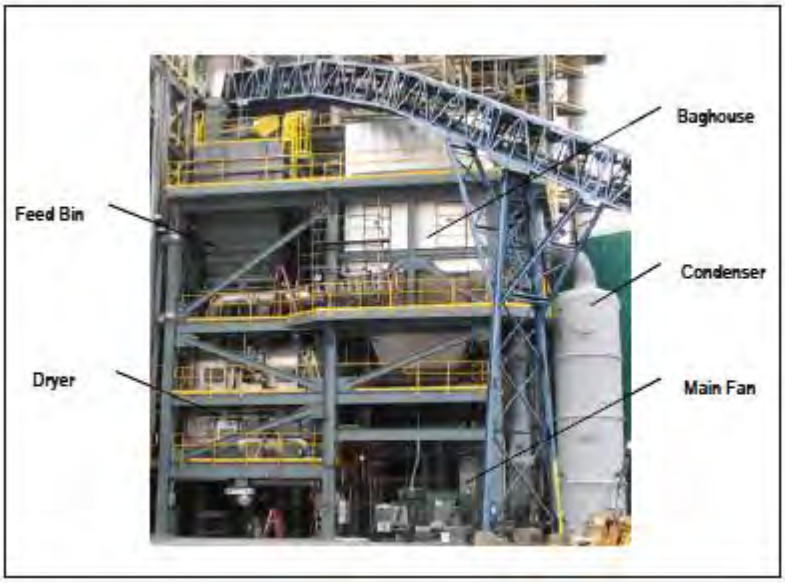

Figure 3-5
PSDF Fluid Bed Dryer System

The fluid bed technology selected operates with high thermal efficiency and requires 25 to 38 percent less energy per amount of water removed than conventional drying methods (1,250 to 1,350 BTU/lb of water evaporated, compared to 1,800 to 2,000 Btu/lb of water evaporated for drying methods such as rotary drum, flash, and belt dryers). Because the fluid bed dryer does not incorporate any internal moving parts, operation and maintenance costs are minimal. Figure 3-6 provides a flow diagram of the PSDF fluid bed dryer system. After processing through a crusher, the coal is fed into the dryer feed bin and then from the dryer feed bin directly to the dryer by a variable rate feed system. Nitrogen is used for drying and fluidization and is heated in a finned tube heat exchanger prior to entering the dryer. As the nitrogen and moist coal mix, the moisture transfers from the coal to the nitrogen. Three in-bed heat exchangers promote additional drying as the fluidized coal flows around and through the heat exchangers resulting in efficient utilization of drying energy.

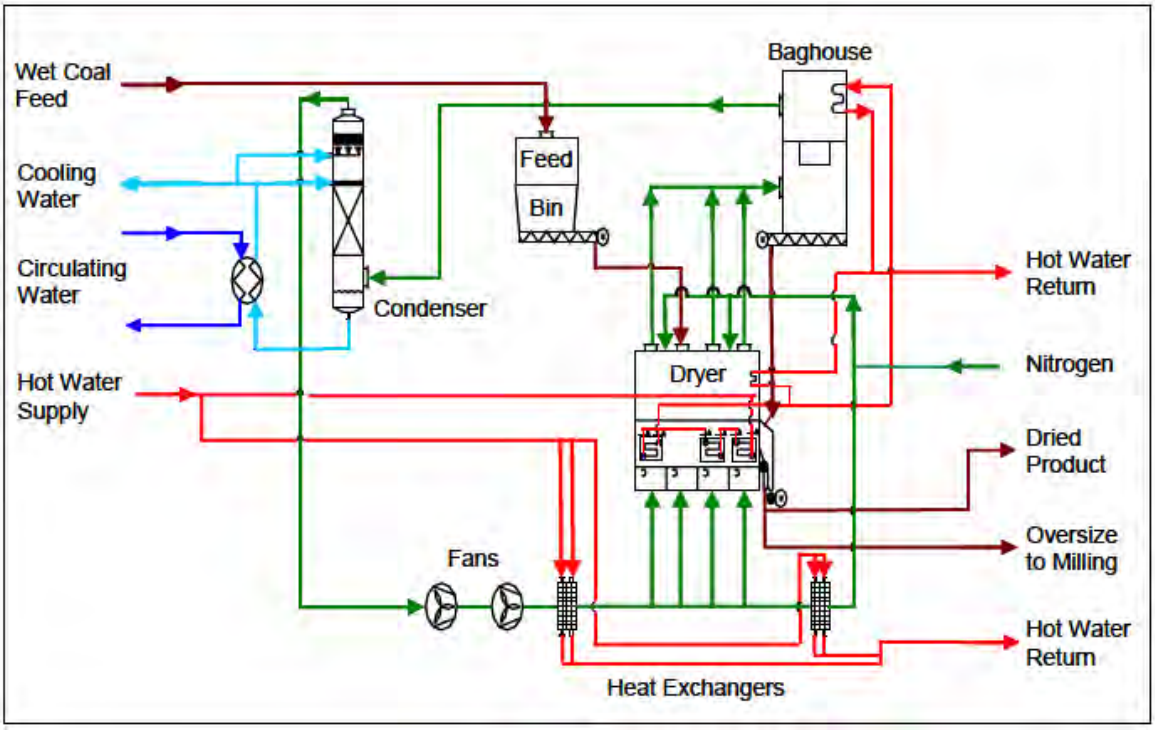

Figure 3-6
Schematic of PSDF Lignite Dryer

The nitrogen at the top of the dryer is nearly saturated with water vapor. A slip stream of gas that bypasses the dryer is sent through a second finned tube heat exchanger to reheat the exit vapor preventing condensation of the gases in the exhaust duct or the baghouse. The gases pass through a baghouse, where entrained particulate is extracted from the gas stream and is conveyed to the dryer product outlet where it is mixed with the dried coal.

Exhaust gas from the baghouse enters a direct contact spray condenser, where the evaporated moisture from the lignite is condensed and extracted. A quench-water recirculation pump takes water from the condenser basin and discharges it above a packed bed to cool the process gas and condense the evaporated water. This condensed water goes to the process wastewater stream at the PSDF, but could be recycled in a commercial facility. The water from the condenser basin is circulated through a heat exchanger to maintain a constant cooling water temperature. A cooling tower is used to provide cooling water to the shell and tube heat exchanger. The quenched nitrogen stream exits the condenser and passes through primary and secondary process blowers. Some gas may be exhausted to the atmosphere to control system pressure. The crushed and dried coal is then fed to a pulverizer system where it is mechanically ground and stored in a silo until ready for use as gasifier feedstock.

The source of thermal energy for the dryer heat exchangers is a high temperature water heater operating at temperatures ranging from 250°F - 300°F. The operating conditions selected

emulate waste heat streams at a commercial facility, further enhancing efficiency of the operation.

Table 3-3 shows the fluid bed dryer operating performance during the initial off-line commissioning. Testing revealed that while particle attrition in the dryer reduced the coal mass median diameter (MMD) particle size, the percentage of oversize particles was higher than desired for coal feed system operation. Thus, the material was sent to the pulverizers for final product sizing.

Table 3-3
Performance of Fluid Bed Dryer during Commissioning Tests

Lignite Processed, Tons (cumulative during tests)	1,152
Dryer Feed Rate, lb/hr	13,100
Inlet Coal Moisture Content, wt. %	44
Outlet Coal Moisture Content, wt. %	21
Inlet Coal MMD, micron	1,100
Outlet Coal MMD, micron	890
Outlet Coal Oversize (>1180 micron) Content, wt. %	40
Outlet Coal Fine (<45 micron) Content, wt. %	5

Parametric testing consistently demonstrated the positive relationship between bed outlet temperature and coal moisture content, and the operating data established the desired range of bed operating temperatures. Figure 3-7 plots the moisture content of the fluid bed dryer product versus the bed temperature. As expected, testing also showed that lower hot water supply temperature resulted in a higher required mass flow rate of hot water but did not impact coal moisture content. Waste heat streams available at a commercial IGCC facility would be able to meet temperature and flow rate requirements.

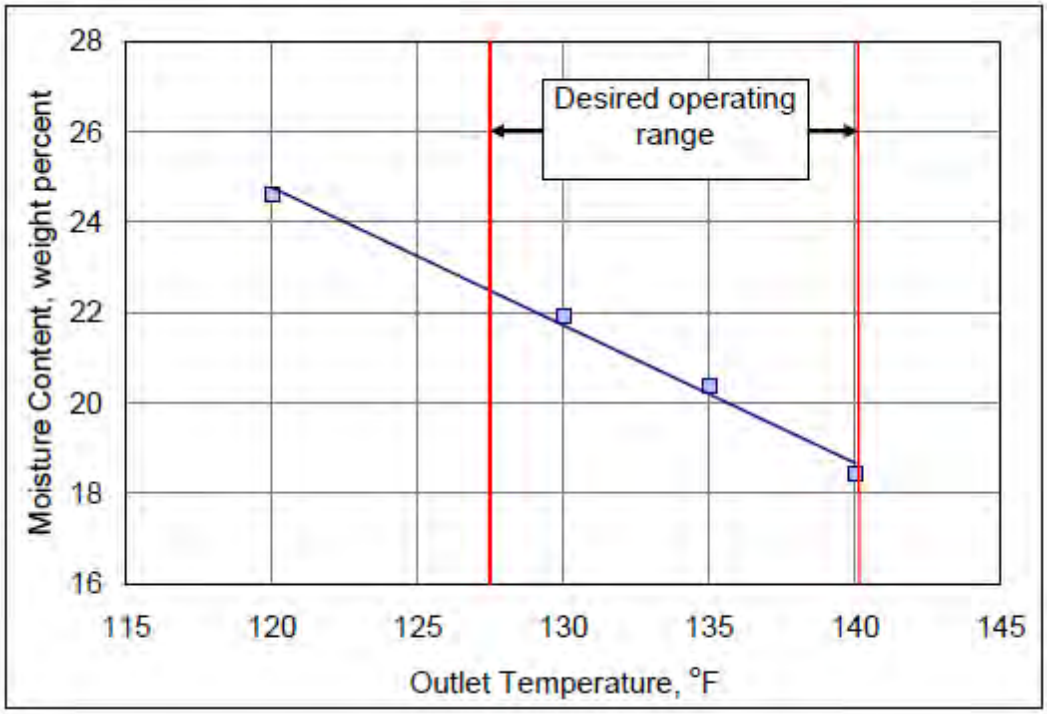

Figure 3-7
Produce Moisture Content versus Fluid Bed Dryer Outlet Temperature

The oversize (reject) removal rate was about 4 to 5 percent of the dryer feed rate, providing stable dryer fluidization and bed differential pressure. The heating value of the reject material was similar to the dried product, making recovery and utilization of this stream desirable in a commercial facility. Oxygen and carbon monoxide analyzers were employed to ensure safe operation of the process and provided accurate readings throughout commissioning activities.

Table 3-4 shows the fluid bed dryer operating performance during gasification testing. The system performed well and produced dried product consistent with observations during commissioning.

Table 3-4
Performance of Fluid Bed Dryer during Gasification Testing

Lignite Processed, Tons	2,800
Dryer Feed Rate, lb/hr	13,000
Inlet Coal Moisture Content, wt. %	42
Outlet Coal Moisture Content, wt. %	20
Inlet Coal MMD, micron	1,080
Outlet Coal MMD, micron	830
Outlet Coal Oversize (>1180 micron) Content, wt. %	40
Outlet Coal Fine (<45 micron) Content, wt. %	10

The lignite processed in the fluid bed dryer was then pulverized in the coal mill pulverizers to reduce the amount of oversize material. The pulverizers reduced the MMD to about 460 microns and the weight percent of oversize particles to about 23 weight percent. Figure 3-8 compares the particle size distribution curves for the fluid bed dryer product and the pulverized material. The additional pulverizing slightly increased the amount of fine material, which averaged about 14 weight percent. In addition, the pulverizers were operated without heat input from the electric heaters resulting in minimal added moisture reduction (lignite moisture content averaged 18 weight percent). The reduction in required heat input would result in increased thermal efficiency in a commercial facility as well. Figure 3-9 compares the processed as-fed moisture content of the Mississippi high moisture lignite before and after installation of the dryer. The coal moisture content after installation of the dryer was consistently maintained below the desired level of 20 weight percent.

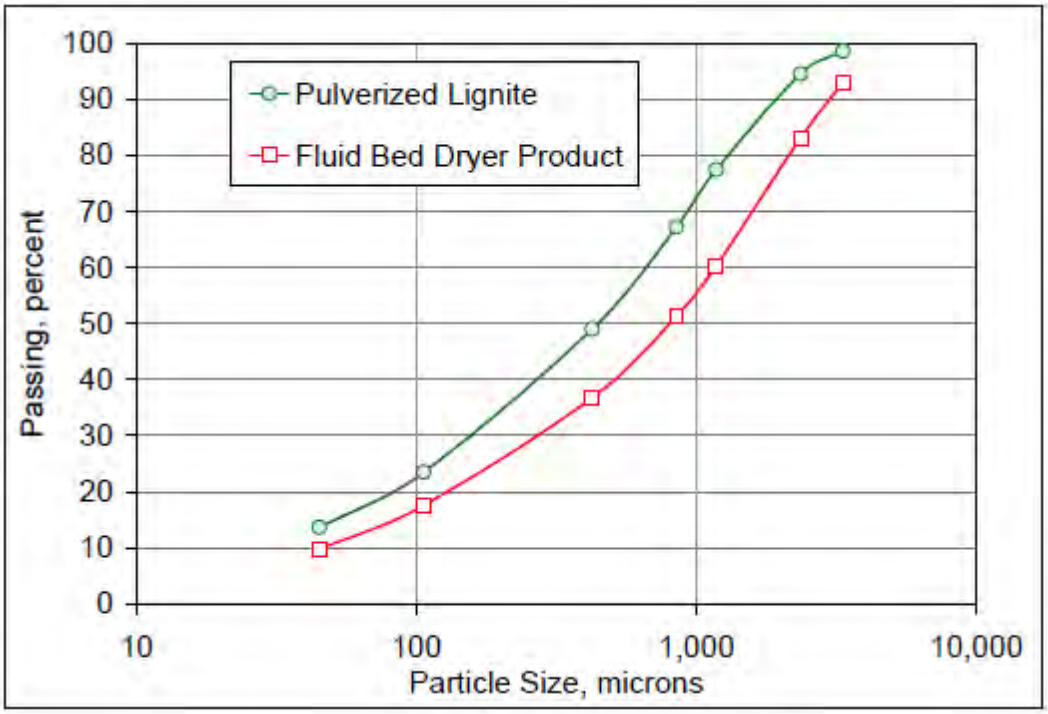

Figure 3-8
Particle Size Distributions of Pulverized Lignite and of Lignite Processed in Fluid Bed Dryer

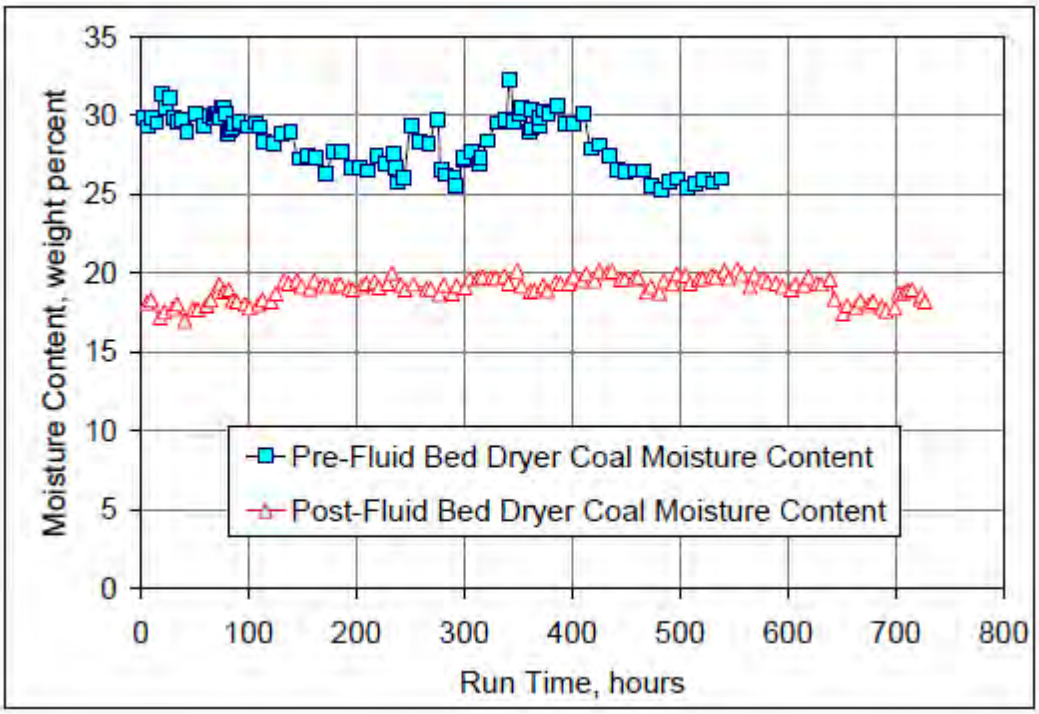

Figure 3-9
Compares the processed as-fed moisture content of the Mississippi high moisture lignite before and after installation of the dryer. The coal moisture content after installation of the dryer was consistently maintained below the desired level of 20 weight percent.

4
COST ANALYSIS

Section 2 of this report indicates that there are significant performance advantages of the commercial Allam Cycle lignite-fuelled plant when compared to existing systems. However, it is important to understand what the expected cost would be for such a system, and how this compares to existing technology options, both with and without carbon capture. This section attempts to provide a reasonable cost estimate based on known costs of similar systems.

For this estimate, Case 2 of Section 2 was assumed to constitute the process design around which the estimate was generated. This case assumes integration of the Allam Cycle with an oxy-blown, entrained-flow, full water quench gasification island and associated coal and ash handling equipment (Gasifier A). This case also assumes that post-combustion sulfur removal is employed via the Lead Chamber processed, described more fully in Section 2.

Although only the final LCOE analysis is presented in the results below, the following sections detail the full methodology utilized for the generation of the capital and operating cost estimates used in the analysis.

Estimating Methodology

The estimating methodology for capital costs, operations and maintenance costs, and levelized cost of electricity are described below.

Capital Costs

This study reports capital cost at the Total Plant Cost level. Total Plant Cost (TPC) includes Bare Erected Cost, Engineering, and Contingency. Bare Erected Cost (BEC) includes the cost of process equipment, on-site facilities and infrastructure that support the plant (e.g., shops, offices, labs, road), and the direct and indirect labor required for its construction and/or installation. The cost of EPC services and contingencies is not included in BEC. BEC is an overnight cost expressed in base-year (mid-2013) dollars.

The TPC comprises the BEC plus the cost of services provided by the engineering, procurement and construction (EPC) contractor and project and process contingencies. EPC services include: detailed design, contractor permitting (i.e., those permits that individual contractors must obtain to perform their scopes of work, as opposed to project permitting, which is not included here), and project/construction management costs. TPC is an overnight cost expressed in base-year (mid-2013) dollars. TPC does not include financing cost and other owner's cost that would be expected for any plant.

Cost Estimate Basis and Classification

The TPC and Operation and Maintenance (O&M) costs in this study were estimated by EPRI using a capacity factored method as described in AACE International Recommended Practice No. 59R-10, "Development of Factored Cost Estimates–As Applied in Engineering, Procurement, and Construction for the Process Industries".

This type of preliminary assessment or concept screening cost estimate is classified as an AACE Class 5 Cost Estimate (AACE International Recommended Practice No. 17R-97, "Cost Estimate Classification System"). The Class 5 cost estimates developed for this study are expected to have an accuracy range of -30%/+50%.

Capacity factored estimates are used to provide a relatively quick and sufficiently accurate means of determining whether a proposed project should be continued or to decide between alternative designs or plant sizes. This early screening method is often used to estimate the cost of battery-limit process facilities, but can also be applied to individual equipment items or systems. The cost of a new plant or system is derived from the cost of a similar plant or system of a known capacity with a similar process conditions. It relies on the nonlinear relationship between capacity and cost as shown below:

$$Cost_B/Cost_A = (Cap_B/Cap_A)^r$$

where $Cost_A$ and $Cost_B$ are the costs of the two similar plants, Cap_A and Cap_B are the capacities of the two plants and r is the exponent, or cost scaling factor. This methodology of using capacity factors is also sometimes referred to as the "economy of scale" method or the "six-tenths factor" method because of the reliance on an exponent of 0.6 if no other information is available. With an exponent of 0.6, doubling the capacity of a plant increases costs by approximately 50 percent, and tripling the capacity of a plant increases costs by approximately 100 percent.

Cost scaling factors for this cost estimate were based on experience from prior detailed EPRI studies of IGCC power plants[17].

Reference Plant Costs and Capacity Factoring of Major Plant Systems

The capital cost estimate for the lignite-fired Allam Cycle is broken down into the following major plant systems:

- Coal Handling
- Coal Prep & Feed
- Gasifier & Auxiliaries
- Slag & Ash Handling
- Heat Exchanger
- Mercury Removal
- Syngas Compressor
- Gasification BOP
- Gasifier ASU
- Combustor ASU
- Allam Cycle

Costs for the Allam Cycle were further broken down into Equipment, Piping & Bulks, Construction & Labor, and Engineering.

[17] 2009 Integrated Gasification Combined Cycle Engineering-Economic Evaluation, Desktop Reference Report (U.S. Units). EPRI, Palo Alto, CA: 2009. 1019367.

Case L3A from the May 2011 NETL baseline report was chosen as the basis for the Allam Cycle cost estimate.[18] This case does not include CO_2 capture.

Cost estimates for major plant systems (non-Allam Cycle) of the integrated lignite plant were capacity factored from the corresponding systems in the NETL report. For example, the coal handling and preparation systems were factored based on total as-received coal flow to the system.

The resulting cost was still expressed in mid-2007 dollars. The cost was then adjusted to mid-2011 dollars using the average escalation factor of 20% as reported in the August 2012 NETL report titled "Updated Costs (June 2011 Basis) for Selected Bituminous Baseline Cases".

EPRI assumed no additional escalation from mid-2011 to mid-2013 dollars based on an average of the Chemical Engineering Plant Cost Index (CEPCI) and Marshall & Swift Index (M&S) for that time period. Note that the CEPCI went up slightly while the M&S index went down slightly over the same time period.

A similar capacity factoring approach was used for the other major gasification plant systems. The basis for the system capacities were as follows:

- Gasifier & Auxiliaries – total heat input to the gasifier (million Btu/hr)
- Slag & Ash Handling – total ash in the feed coal (lb/hr)
- Heat Exchanger – total heat exchanger duty (million Btu/hr)
- Mercury Removal – total syngas flow (lb/hr)
- Gasifier ASU – total oxygen flow (lb/hr)
- Combustor ASU – total oxygen flow (lb/hr)

The cost for the syngas compressor was based on an equipment quote provided by 8 Rivers Capital. EPRI assumed an installation factor of 2.0 to get a total installed cost, including engineering and contingency.

The gasification balance of plant cost was based on 10% of the overall gasification systems cost derived from Case L3A of the NETL report[19]. This includes costs for Electrical, I&C, Site Prep, Buildings/Structures.

Equipment from NET Power's US-based Pre-FEED for the 290 MWe, first-of-a-kind (FOAK) natural gas-fired Allam Cycle was used as the basis for the commercial lignite-fired Allam Cycle. As with the gasification and coal handling equipment, costs of major components of the Allam Cycle were scaled based on the relative difference of flow rates between the gas- and lignite-fuelled cycles. Since the primary power cycle is common to both cycles, there are only minor differences in the coal-fuelled Allam Cycle equipment list, most notably the lack of equipment necessary in the gas cycle for the generation of low grade heat.

[18] "Cost and Performance Baseline for Fossil Energy Plants, Volume 3a: Low Rank Coal to Electricity: IGCC Cases".
[19] "Cost and Performance Baseline for Fossil Energy Plants, Volume 3a: Low Rank Coal to Electricity: IGCC Cases".

The construction approach for the Allam Cycle costs is assumed to be direct hire and based on current US Gulf Coast wage rates. Direct craft man-hours (MH's) were factored and adjusted for variations due to larger sized equipment and review of the piping installation MH's based on material, sizing and wall thickness. These were then adjusted to a North Dakota basis using data from EPRI's proprietary PCCost program. All indirect costs have been factored based on the past history of NET Power's partners for similar size projects.

An estimate of nth-of-a-kind (NOAK) costs was also prepared for comparison to NETL estimates of conventional technologies. For those components within the core Allam Cycle, Nth cost estimates were taken from the US-based Pre-FEED for the 290MWe, NOAK natural gas-fired estimate. As with the FOAK estimate, costs of major components of the Allam Cycle were scaled based on the relative difference of flow rates between the gas- and lignite-fuelled cycles. For those components added to the cycle based on scaling of equipment from the NETL report, Nth cost estimates were derived using the NETL learning curve method.[20]

The Allam Cycle estimate basis excludes:

- Development costs
- Risk insurance
- Forward escalation (estimate is assumed present day)
- Taxes, bonds, and letters of credit
- Ocean transport of equipment, custom duties, value added taxes, and offload fees
- Processing of the exported CO_2 to meet pipeline requirements for O_2 and water,
- Ground remediation, e.g. contamination from previous use
- Piling and foundations

Operating & Maintenance Costs

Operating and maintenance costs for the Siemens gasification-based Allam Cycle plant were estimated as a percentage of the Total Plant Cost based on EPRI's experience with similar gasification facilities. Approximately 3.5% of TPC was included as an allowance for fixed O&M costs, including operating labor, maintenance labor, maintenance materials, administrative & support labor.

Variable O&M costs include consumable items such as water, chemicals, solid waste disposal, etc. and were factored from prior studies[21].

The lignite fuel cost was assumed to be $1.40/MMBtu.

Levelized Cost of Electricity

A common measure of the overall economics of a given power plant design is the levelized cost of electricity. This takes into account the capital and operating costs, as well as the fuel costs. The following discussion briefly summarizes the EPRI Revenue Requirement Methodology, including a simplified method for calculating the levelized cost of electricity.

[20] NETL. "Quality Guidelines for Energy Systems Studies: Technology Learning Curve (FOAK to NOAK)". August 2013
[21] Ibid

Revenue Requirement (**RR**) is defined as the total revenue that must be collected from customers to compensate a utility for all expenditures associated with implementing a project.

RR = Carrying Charges + Expenses

Carrying Charges (CC) are defined as the sum of return on debt, return on equity, income taxes, book depreciation, property taxes, and insurance. Expenses include operating & maintenance costs and fuel cost.

The Cost of Electricity (COE) has three main components:

- Carrying Charges (CC)
- Operating & Maintenance Costs (O&M)
- Fuel Costs

COE = CC + O&M + Fuel

Constant Dollar Levelized COE does not incorporate inflation effects and is generally preferred by economic analysts since the levelized values are closer to today's costs of electricity. Current Dollar Levelized COE includes inflation effects.

Levelized Capital Related Carrying Charges (**CC**) are calculated as follows:

CC = (TPC x CCF) / (8760 x CF) x 1000

where,

TPC = Total Plant Cost, $/kW

CCF = Levelized Carrying Charge Factor

CF = Capacity Factor, %

The units of CC, and COE, are $/MWh.

EPRI assumes a 30-year book life for plant costs and a 30-year levelization factor (carrying charge) is used as a multiplier applied to the TPC to give a capital charge in $/MWh. The factor takes into account owners costs (OC), allowance for funds used during construction (AFUDC), depreciation, and return on investment. A CCF matching that of IGCC plants was assumed for the Allam Cycle lignite system.

The capacity factor for all plants was assumed to be 80%.

Results

Using data from the 2011 NETL report for lignite-fuelled gasification plants, a First-of-a-Kind (FOAK) total plant cost estimate (excluding development and owner's costs) for the coal-based Allam Cycle was estimated for a 286MWe facility. This FOAK estimate is then used to generate an estimate of Nth-of-a-Kind (NOAK) facility using an NETL learning curve analysis and published factors for NOAK equipment cost reductions.[22] Table 4-1 below summarizes this estimate and compares it to existing IGCC and SCPC technologies, both with and without carbon capture. Data for existing technologies was derived from several sources including NETL[23] as well as more recent estimates from Parsons Brinkerhoff[24] and the EIA[25]. These sources provide a range of cost estimates for existing technology for comparison with Allam Cycle costs.

Table 4-1
Summary of Lignite-Fuelled Allam Cycle Costs vs. NETL Baseline Cases

	Allam Cycle		SCPC	SCPC w/ CCS	IGCC	IGCC w/ CCS
	FOAK	NOAK				
Scaled Total Plant Cost*	**3,078**	**2,499**	**2,701 – 3,058**	**4,711 – 4,925**	**3,508 – 4,096**	**4,561 – 6,013**
Fuel Cost, $/MWh	10.1	9.5	12.3 – 12.7	16.8 – 18.7	12.2 – 12.7	15.0 – 15.9
VOM, $/MWh	1.8	1.8	3.6 – 4.5	7.2 – 9.5	1.8 – 7.2	2.8 – 8.5
FOM, $/MWh	11.0	7.1	6.1 – 10.2	13.0 – 15.7	9.9 – 17.6	11.4 – 21.9
Capital, $/MWh	54.3	44.1	46.6 – 52.8	81.3 – 85.0	61.9 – 72.5	80.5 – 106.4
30-yr Constant Dollar LCOE	**77.2**	**62.6**	**73.2 – 75.7**	**122.9 – 124.3**	**94.0 – 101.8**	**121.1 – 141.2**
EOR Sales @ $20/tonne**	-14.5	-14.5	0.0	-23.9	0.0	-20.2
LCOE w/ EOR Sales	**62.7**	**48.1**	**73.2 – 75.7**	**99.0 – 100.4**	**94.0 – 101.8**	**100.9 – 121.0**

*Capital costs are scaled (0.85 factor) to match the Allam Cycle output to account for economies of scale. Subsequent LCOE calculations are based on these scaled capital estimates. Cost data is pulled from several sources (NETL, 2010; EIA[26], 2013) to provide a range of estimates
**EOR sales do not account for transport and storage infrastructure that may be required

As is seen in this table, estimated LCOE for a FOAK 287MWe Allam Cycle lignite plant are below that of traditional coal-based generation, even without valuing the captured CO_2. In addition, a FOAK Allam Cycle plant is expected to provide an efficiency increase of ~10 percentage points (HHV), in addition to near 100% carbon capture. Revenue of only $20/tonne

[22] NETL. "Quality Guidelines for Energy System Studies: Technology Learning Curve (FOAK to NOAK)". August 2013
[23] Ibid
[24] Parsons Brinkerhoff. "Electricity Generation Cost Model – 2013 Update of Non-renewable Technologies". April 2013.
[25] U.S. Energy Information Administration. "Updated Capital Cost Estimates for Utility Scale Electricity Generating Plants". April 2013
[26] US Energy Information Administration. "Updated Capital Estimates for Utility Scale Electricity Generating Plants". April 2013

CO_2 makes the FOAK Allam Cycle significantly cheaper on an LCOE basis than SCPC (without CO_2 capture), the lowest cost modern coal system is use today.

For the purposes of this study, fuel costs were assumed to be $1.40/MMBtu. With increasing fuel costs, the benefits of efficiency savings will become more pronounced and produce further LCOE savings for the Allam Cycle relative to existing technologies.

Summary

In summary, a FOAK estimate of the total plant cost for a 287 MWe lignite-fuelled Allam Cycle was developed with the following parameters:

- The process design presented in Case 2 of Section 2 was assumed to be the basis of the estimate, exhibiting an efficiency of 47.4% HHV with near 100% carbon capture and only slight optimization of the overall process scheme
- An AACE Class V FOAK capital cost estimates and associated LCOE calculations indicate that these costs make the Allam Cycle with near 100% carbon capture extremely competitive or superior to conventional coal-based generation without carbon capture